ROSEBURG URBAN SANITARY AUTHORITY
ROSEBURG, OREGON

For the Construction of

HOOKER ROAD SEWER PROJECT

Leeway Engineering Solutions
12597 NW Majestic Sequoia Way
Portland, OR 97229
(503) 828-7542

TABLE OF CONTENTS

INVITATION TO BID..... 1

INFORMATION TO BIDDERS 2

BIDDER'S CHECK LIST..... 6

BID FORM 7

Declarations and Statements 8

Signatures 10

STANDARD BID BOND FORM..... 11

FIRST TIER SUBCONTRACTOR DISCLOSURE FORM..... 12

DRUG TESTING PROGRAM CERTIFICATION FORM..... 13

PRE-BID NOTICE AND CERTIFICATION..... 14

CONSTRUCTION CONTRACT 15

STANDARD PERFORMANCE BOND..... 17

STANDARD PAYMENT BOND..... 19

PUBLIC WORKS BOND FILING CERTIFICATION 21

PREVAILING WAGE RATES..... 22

MODIFIED GENERAL CONDITIONS..... 1-101

INVITATION TO BID

The Roseburg Urban Sanitary Authority will receive sealed bids marked **"Hooker Road Sewer Project"** until the hour of **2:00 p.m.** on January 6, 2021, at which time they will be publicly opened and read. When required, bidders must submit a list of their first-tier subcontractors providing labor, or labor and materials, no later than 4:00 p.m. that same day. Bids shall be addressed and delivered to Jim Baird, General Manager, Roseburg Urban Sanitary Authority, 1297 NE Grandview Drive, Roseburg, Oregon 97470. Any and all bids received after the 2:00 p.m. deadline for submission will not be considered and returned unopened to the bidder. Any bid for which the list of first-tier subcontractors, when required, has not been submitted by 4:00 p.m. that same day, shall be considered nonresponsive and returned to the bidder. All bids must be identified with the bidder's "Construction Contractors Board" license number as required by Oregon Laws on the outside of the sealed bid envelope.

The proposed work generally consists of construction of approximately 1,000 LF of small diameter sewer main, rehabilitation of approximately 2,500 LF of small diameter sewers, rehabilitation of approximately 2,500 LF of 18-inch sewers, lateral reconstruction, and manhole replacement and rehabilitation. All work on this project shall be completed on or before June 30, 2021.

A copy of the Contract Documents may be obtained from Roseburg Urban Sanitary Authority, 1297 N.E. Grandview, Roseburg, OR 97470 (phone 541-672-1551) for a fee of $25. Bids must be accompanied by a certified check, cashier's check, irrevocable letter of credit or Bid Bond in an amount equal to not less than ten percent (10%) of the total amount of the bid.

Bidders shall state as part of the bid that the provisions of ORS 279C.800 to 279C.870 (Prevailing Wage Rates) shall be complied with. Bidders must also certify as part of the bid that the requirements of ORS 279C.505(2) (Employee Drug Testing Program) shall be complied with. Each bid must contain a statement as to whether the bidder is a resident bidder, as defined in ORS 279A.120. Bidders are not required to be licensed under ORS 468A.720 (Asbestos Abatement). Unless exempt under ORS 279C.800 to 279C.870, the successful bidder must file a $30,000 Public Works Bond with the Construction Contractors Board prior to beginning work on the project, and certify that all sub-contractors have also filed such bond.

Roseburg Urban Sanitary Authority may reject any bid not in compliance with all public bidding procedures and requirements, may waive any irregularities, and may reject for good cause any or all bids upon a finding it is the public interest to do so.

Dated this 7th day of December, 2020.

ROSEBURG URBAN SANITARY AUTHORITY
Roseburg, Oregon

INFORMATION TO BIDDERS

1. FORM OF BID

All bids must be made upon the blank Bid Form attached hereto with a lump sum price as required in the Bid Form.

Roseburg Urban Sanitary Authority reserves the right to reject any or all bids or to accept the bid deemed in its best interest. Without limiting the generality of the foregoing, RUSA may reject any bid which is incomplete, obscure or irregular; which omits any one or more items in the price sheet; in which unit prices are obviously unbalanced; or which is accompanied by an insufficient or irregular Bid Bond.

The bidder shall sign the Bid Form in the blank space provided therefore. All bids must contain the bidder's tax identification number. Bids made by a corporation, general or limited partnership, or L.L.C., shall contain the name and address of such organization, together with names and addresses of officers, partners or managing members. If the bid is made by a corporation, it must be signed by one of the corporate officers with the authority to sign for the corporation; if made by a partnership, by one of the partners.

All bids must be submitted at the time and place, and in the manner prescribed in the Invitation to Bid.

2. CHANGES TO PLANS, SPECIFICATIONS, OR QUANTITIES BEFORE BID OPENING

The Agency reserves the right to issue Addenda making changes or corrections to the Plans, Specifications, or quantities. The Agency will provide Addenda by mail, fax, email or other electronic method only to those on the list of Holders of Bidding Plans. Bids shall incorporate all Addenda. Bids may be rejected if opened and found by the Agency to not be based on all Addenda issued.

3. BID DOCUMENTS

The Contract Bid Documents for this Project consist of, but are not necessarily limited to, the Invitation to Bid, Information to Bidders, Bidder's Checklist, Bid Form including Certificate of Residency, Drug Testing Program Certification Form, Bid Bond Form, Construction plans and other Supplemental Agreements. Any person contemplating the submission of a bid and being in doubt as to the meaning or intent of said Documents should request of the Agency in writing, an interpretation thereof. Any interpretation of said Contract Documents shall be made only in writing by RUSA.

4. CONSTRUCTION CONTRACTORS' BOARD

All contractors bidding on public contracts must be licensed with the Construction Contractors' Board as required by ORS 671.530. Bids must be identified with the Contractors' Board license number on the outside of the bid envelope and as required within. No bids will be considered without this information.

5. DISCLOSURE OF FIRST-TIER SUBCONTRACTORS

When a public improvement contract value is greater than $100,000, all bidders are required to disclose information about first-tier subcontractors, providing labor or labor and materials, when the contract amount of such first-tier subcontractor is equal to or greater than:

1) 5% of the project bid, or $15,000.00, whichever is greater; or
2) $350,000 regardless of the percentage of the total bid.

Bidders must disclose the following information about such subcontracts, on the First-Tier Subcontractor Disclosure Form provided and included herein, within two hours of the bid submission deadline:

1) The subcontractor's name;
2) The subcontract dollar value; and
3) The category of work to be performed by the subcontractor.

Any bidder not using subcontractors subject to the above disclosure form, must write "NONE" on the Disclosure Form and sign and submit the form. Roseburg Urban Sanitary Authority will reject a bid if the bidder fails to submit the Disclosure Form before the deadline.

5. DRUG TESTING PROGRAM

ORS 279C.505(2) requires public improvement contracts to include a provision requiring contractors to demonstrate that they have an employee drug and alcohol testing program in place. All bidders are required to certify, on the Drug Testing Program Certification Form provided by the RUSA and included herein, that they have such program in place. This certification will become part of the Contract if awarded and contractor will be required to maintain such program throughout the performance of the Contract. Failure to maintain a program shall constitute a material breach of the Contract.

6. PROMPT PAY POLICY - TIMELY PROGRESS PAYMENTS

ORS 279C.570 and 279C.580 require prompt payment to contractors and subcontractors and provides for settlement of compensation disputes between the parties. Roseburg Urban Sanitary Authority is required to automatically calculate and pay interest on invoices from the contractor when payments become overdue. The interest commences 30 days after receipt of the invoice from the contractor, or 15 days after the payment is approved by RUSA, whichever is earlier. The rate of interest charged to RUSA on the amount due shall equal three times the discount rate on 90-day commercial paper, but shall not exceed 30 percent.

RUSA is also required to ensure that the contractor includes a clause in each subcontract that obligates the contractor to pay first-tier subcontractors for satisfactory performance under its contract. Contractors must pay subcontractors within 10 days of receiving

payment from the Agency. Contracts between primary contractors and subcontractors must also contain an interest penalty clause that obligates the contractor, if payment is not made to the subcontractor within 30 days after receipt of payment from the Agency, to pay the first-tier subcontractor an interest penalty on amounts due in the case of each payment not made in accordance with the subcontract payment clause. The contractor is also required to ensure that first-tier subcontractors include these requirements in each of its subcontracts with lower-tier subcontractors or suppliers.

If requested in writing by a first-tier subcontractor, within ten calendar days after receiving the request, the contractor must provide the first-tier subcontractor, a copy of that portion of any invoice or request for payment submitted to the Agency, or pay document provided by the Agency to the contractor, specifically related to any labor or materials supplied by the first-tier subcontractor.

7. BID BOND

All Bids shall be accompanied by a Bid guaranty in the amount of 10% of the total amount of the Bid.

8. CONDITIONS OF WORK

Bidders must make their own determination of the nature of the work proposed under this Contract, the local conditions which can be encountered in this area, and all other matters which can in any way affect the work proposed under this Contract. It shall also be the bidder's responsibility to be thoroughly familiar with the Contract Documents. Failure to make the examination necessary for this determination or to examine any form, instrument or document of the Contract shall not release the bidder from the obligations of this Contract.

9. BID OPENING; REJECTIONS; DISQUALIFICATIONS; RECIPROCAL PREFERENCE

Bids will be opened and the total price for each Bid will be read publicly at the time and place as indicated in the Invitation to Bid. Bidders and other interested parties are invited to be present. Bids will be compared on the basis of the total amount of each Bid.

A Bid will be considered irregular and will be rejected if the irregularity is deemed by the Agency to render the Bid non-responsive.

A Bid of a qualified Bidder will be rejected if more than one Bid is submitted for the same Work by an Entity under the same or different name(s); if there is evidence of collusion among Bidders; and any of the grounds for disqualification cited in ORS 279C.440. e disqualified if the Bidder has been declared ineligible by the Commissioner of the Bureau of Labor and Industries under ORS 279C.860; not been registered (licensed) by the Oregon Construction Contractors Board before submitting a Bid. The Bidder's registration number and expiration date shall be shown in the Bid form; or been determined by the CCB under ORS 701.227 not to be qualified to hold or participate ina

public contract for a public improvement.

Bidders shall complete the certificate of residency included in the Bid Schedule. Failure to complete the form will be cause to reject the Bid. A Resident Bidder means a Bidder who has Paid unemployment taxes or income taxes in the State of Oregon during any of the 12 calendar months immediately preceding submission of the Bid; A business address in the State of Oregon: and Certified in the Bid that the Bidder qualifies as a Resident Bidder.

10. EXECUTION OF CONTRACT, BONDS AND DAMAGES FOR FAILURE TO EXECUTE

The Agency reserves the right to waive minor informalities and irregularities and to reject any or all Bids for irregularities under 00120.70 or for good cause after finding that it is in the public interest to do so (IRS279C.395).

Failure of the successful Bidder to execute the Contract and provide the required certificates, certifications, and bonds may be cause for cancellation of the Award, and may be cause for forfeiture of the Bid guaranty under ORS 279C.385.

BIDDER'S CHECK LIST

Bidder's attention is called to the following forms and conditions, which must be executed in full as required with the bid and completed in accordance with the provisions of the Modified General Conditions:

A. **BID FORM(S):** Each bidder shall complete the bid form(s) in accordance with Section 00120.40, Preparation of Bids.

B. **BID GUARANTY:** All bids shall be accompanied by a Bid guaranty and conform to Section 00120.40(e). If a Surety bond is submitted, bidder must use the standard Bid Bond form included. The amount of a certified check, cashier's check, irrevocable letter of credit or Bid Bond shall not be less than 10% of the total Bid amount.

C. **FIRST-TIER SUBCONTRACTOR DISCLOSURE FORM:** When required by law, this form must be submitted by the bid submission deadline, at which time bids will be opened and read, or within two working hours of such submission deadline. If no subcontractors for labor or for labor and materials will be used, the bidder must write "NONE" on the disclosure form, sign and submit the form as required. Failure to submit this form within two hours of the bid submission deadline will result in the bid becoming non-responsive and such bid will be returned to the bidder.

D. **DRUG TESTING PROGRAM CERTIFICATION FORM:** This form must be submitted with the bid to demonstrate that bidder has an employee drug and alcohol testing program in place and will continue to keep the program in place throughout the duration of performing the Contract awarded.

E. **PUBLIC WORKS BOND PRE-BID NOTICE & CERTIFICATION FORM:** This form must be submitted with the bid to demonstrate contractor's awareness of and intended compliance with the requirement to file a Public Works Bond with the Construction Contractors Board prior to beginning work on the project if awarded the bid.

The following forms are to be executed after the Contract is awarded, prior to beginning work on the project:

A. **CONSTRUCTION CONTRACT:** This agreement is to be executed by the successful bidder.

B. **PERFORMANCE BOND AND PAYMENT BOND:** Both a Performance Bond and a Payment Bond are to be executed by the successful bidder and bidder's Surety Company and submitted at the time the Contract is executed.

C. **PUBLIC WORKS WAGE CERTIFICATION FORM:** This form is to be completed in accordance with state law and submitted with the first and last request for payment.

D. **CERTIFICATE OF INSURANCE:** This certificate is to be executed by the successful bidder and bidder's insurance company and submitted at the time the Contract is executed.

E. **PUBLIC WORKS BOND FILING CERTIFICATION:** This form is to be executed by the successful bidder and submitted at the time the Contract is executed to certify if Contractor has filed the required Public Works Bond or elected not to file the Bond due to qualifying under ORS 200.055.

BID FORM

Roseburg Urban Sanitary Authority
1297 NE Grandview Drive Roseburg,
Oregon 97470

The undersigned bidder has carefully examined the Contract Documents for the construction of the

HOOKER ROAD SEWER PROJECT

referred to in the Invitation to Bid dated 16th day of November, 2020 inviting bids on such Project and also the site of the Project. Bidder will provide all necessary labor, equipment, tools, apparatus and other means of construction, do all the work and furnish all the materials called for by said Contract Documents in the manner prescribed therein to provide a complete Project.

Notes:

(1) Bid items shall include all applicable taxes, fees and permits.

(2) RUSA has a fixed budget for the Project. Evaluation of Bids will be based on the lowest Total Cost for Schedule A from responsible and responsive firms. If the Base Bid is lower than the budget, RUSA can elect to add Schedule B as an Owner-option. If the Project budget can support additional work, RUSA can then elect to add Schedule C.

SCHEDULE A – BASE BID
(All work not included in Schedules B and C, listed below. Manhole work common to multiple schedules shall be included in the higher priority schedule, as reflected in the bid quantities.)

Bid Item	Spec Section	Item Description	Qty	Unit	Unit Cost	Total Cost
A1	210	Mobilization	1	LS		
A2	225	Traffic Control	1	LS		
A3	320	Erosion Control	1	LS		
A4	408	One Piece Main and Lateral Liner, Lateral, 0 to 12 Ft	3	EA		
A5	408	One Piece Main and Lateral Liner, Lateral, Each additional foot	113	LF		
A6	412	CIPP Liner, 8-inch	2109	LF		
A7	412	CIPP Liner, 18-inch	2354	LF		
A8	412	Internal Lateral Reinstatement	2	EA		
A9	415	Service Line Video Inspection, Launch Camera	3	EA		
A10	444	Private Individual Pumping Station	6	EA		
A10.1	444	Optional Remote Monitoring System	6	EA		
A11	444	2 Inch Pressure Sewer	334	LF		
A12	445	4 Inch PVC Pipe, 5 Ft Depth	1248	LF		
A13	445	8 Inch PVC Pipe, 5 Ft Depth	981	LF		
A14	445	Pipe Tees, 4-Inch x 8-Inch or 6-Inch x 8-Inch	15	EA		
A15	445	Existing Service Line Reconnections	24	EA		
A16	445	Cleanout over Existing Lateral	19	EA		
A17	470	Concrete Manholes, 48 Inch	6	EA		
A18	470	Concrete Manhole, 60 Inch	1	EA		

A18	490	Filling Abandoned Structures	18	EA		
A19	490	Sewer Bypassing	1	LS		
A20	492	Manhole Rehabilitation	10	EA		
A21	495	Trench Resurfacing	1750	SY		
A22	640	3/4-inch Aggregate Base	1847	TON		
A23	1020	Landscape Restoration	1	LS		
					Bid Total (Schedule A)	

Total Bid (Schedule A): _____(use words)

SCHEDULE B – RUSA OPTION
(C-3: N11283-N11276, N11280-N11279;
C-4: N11288-N11287, N11285-N11277; C-5 and C-8: N10365-N10364)

Bid Item	Spec Section	Item Description	Qty	Unit	Unit Cost	Total Cost
B1	210	Mobilization	1	LS		
B2	225	Traffic Control	1	LS		
B3	320	Erosion Control	1	LS		
B4	408	One Piece Main and Lateral Liner, Lateral, 0 to 12 Ft	7	EA		
B5	408	One Piece Main and Lateral Liner, Lateral, Each additional foot	105	LF		
B6	412	CIPP Liner, 8-inch	604	LF		
B7	412	Internal Lateral Reinstatement	9	EA		
B8	445	4 Inch PVC Pipe, 5 Ft Depth	300	LF		
B9	445	Service Line Reconnections	8	EA		
B10	445	Cleanout over Existing Lateral	19	EA		
B11	470	Concrete Manholes, 48 Inch	1	EA		
B12	490	Bypass Pumping	1	LS		
B13	492	Manhole Rehabilitation	5	EA		
B14	495	Trench Resurfacing	50	SY		
B15	640	3/4-inch Aggregate Base	254	TON		
B16	1020	Landscape Restoration	1	LS		
					Bid Total (Schedule B)	

Total Bid (Schedule B): _____(use words)

Total Bid (Schedule A+B): _____(use words)

SCHEDULE C – RUSA OPTION (C-3: N11284-N11283, N11282-N11281, N11281-N11280; C-4: N11286-N11285, N11322; C-6: N10360-N11526)						
Bid Item	**Spec Section**	**Item Description**	**Qty**	**Unit**	**Unit Cost**	**Total Cost**
C1	210	Mobilization	1	LS		
C2	225	Traffic Control	1	LS		
C3	320	Erosion Control	1	LS		
C4	408	One Piece Main and Lateral Liner, Lateral, 0 to 12 Ft	23	EA		
C5	408	One Piece Main and Lateral Liner, Lateral, Each additional foot	525	LF		
C6	408	Lateral Liner (from Manhole)	6	EA		
C7	412	CIPP Liner, 8-inch	764	LF		
C8	412	Internal Lateral Reinstatement	17	EA		
C9	445	Cleanout over Existing Lateral	23	EA		
C10	445	4 Inch PVC Pipe, 5 Ft Depth	367	LF		
C11	445	6 Inch PVC Pipe, 5 Ft Depth	1	LS		
C12	445	Service Line Reconnections	9	EA		
C13	445	Terminal Cleanout	1	EA		
C14	492	Manhole Rehabilitation	5	EA		
C15	495	Trench Resurfacing	50	SY		
C16	640	3/4-inch Aggregate Base	312	TON		
C17	1020	Landscape Restoration	1	LS		
					Bid Total (Schedule C)	

Total Bid (Schedule C): _____(use words)

Total Bid (Schedule A+B+C): _____(use words)

Declarations and Statement

1 That the only persons or parties interested in this bid are those named herein, that the bid is in all respects fair and without fraud, and that it is made without any connection or collusion with any person making another bid on this Contract.

2 That the bidder, and any subcontractor upon which the bidder is relying, have carefully examined and had an opportunity to comment on, the Contract Documents for the construction of the proposed improvements including a full set of the plans and specifications, including all addenda thereto; that bidder has personally inspected the contemplated construction area or areas; that bidder is satisfied as to the adequacy and completeness of the plans and specifications, the feasibility of the work described therein, quantities of materials, items of equipment and conditions of work involved, including the fact that the description of work and materials as included herein are approximate only; and that this bid is made according to the provisions and under the terms of the Specifications which are hereto attached and hereby made a part of this bid.

3 All of the Specifications and Plans which are listed herein have been examined by the undersigned bidder and the terms and conditions thereof are hereby accepted.

4 It is understood that the Plans may be supplemented by additional Drawings and Specifications in explanation and elaboration of the Plans and it is agreed that such Supplemental Drawings, when not in conflict with those referred to in Paragraph 3 above, will have the same force and effect as if completed and attached hereto, and that when received, will be considered a part of the Contract Documents.

5 It is understood that all work will be performed under the price schedule outlined herein and that all services, materials, labor and equipment and all work necessary to complete the Project in accordance with the Plans and Specifications shall be furnished for the prices named in the bid. If there is a change in the scope of work or work which cannot be properly classified under the price schedule then bidder agrees to do this work as "extra work". The undersigned bidder agrees to do any extra work and furnish materials, and to accept as full compensation therefore, such prices as may be agreed upon in writing by RUSA and the Contractor before extra work begins. Each party binds itself to agree to reasonable prices.

6 The bidder agrees that if this bid is accepted, the bidder will, within the time specified execute the Construction Contract with RUSA in the form of Contract specified, and will, at the time of execution of the Contract, deliver to RUSA the Performance Bond and Payment Bond required herein, and will furnish all the materials necessary to complete the Project in the manner, in the time and according to methods as specified in the Specifications and required by Roseburg Urban Sanitary Authority

7 The Bid Guaranty in a form shall be payable to RUSA to the extent of 10% of the amount of the bid in case this bid is accepted and the undersigned shall fail or refuse to execute the Contract and furnish a Payment Bond and a Performance Bond as required by the Specifications within the time limit named therein after notification that said bid is accepted, all in accordance with the provisions of this bid and the Plans and Specifications which are a part hereof.

8 All items for the Contract for which forms are provided herein have been completed in full by the showing of prices for each and every item thereof, and for the showing of other information indicated by the Bid Form.

9 Bidder agrees to begin work after the execution of the Contract proposed herein and receipt of the

Notice to Proceed. All work on this project shall be completed in its entirety on or before June 30, 2021 regardless of the start date.

10 In the event the bidder is awarded the Contract and fails to complete the Project within the time limit or extended time agreed upon, as more specifically set forth in the Special Provisions, liquidated damages shall be paid to or withheld by RUSA pursuant to Paragraph 4 of the Construction Contract (Time of Performance - Liquidated Damages) at the rate of $1,500.00 per day, until the Project has been completed as provided in the Specifications.

11 The undersigned bidder hereby states, as part of this bid, that the applicable provisions of Oregon's Prevailing Wage Law (ORS 279C.800 to 279C.870) and the Federal Prevailing Wage Law (Davis-Bacon Act, 40 U.S.C. 3141-3148), shall be complied with. When the Project is subject to both the State and Federal Prevailing Wage Laws and rates, workers in each trade will be paid the higher of the two rates.

12 The undersigned bidder and bidder's subcontractors shall comply with ORS 656.017, which requires them to provide Workers' Compensation coverage for all their subject workers.

13 The undersigned bidder hereby states, as part of this bid, that bidder shall comply with ORS 279C.505(2) which requires bidder to have an employee drug testing program in place.

14 The undersigned bidder and bidders' subcontractors shall comply with ORS 279C.570 and 279C.580, which require timely progress payments for public improvement projects and provide interest penalties for late payment.

15 The undersigned bidder hereby states, as part of this bid, which bidder and bidder's subcontractors shall comply with the provisions of the Modified General Conditions, Volume 1.

16 If the bidder is awarded the Contract for this work, the name and address of the Surety who will provide the Payment Bond and Performance Bond will be:

_____

17 The name and address of the bidder who is submitting this bid is:

_____

which is the address to which all communications pertinent to the bid and the Contract shall be sent.

18 The names of the principal officers of the corporation submitting this bid or of the partnership, or of all parties interested in this bid as principals are as follows:

_____

19 The undersigned bidder acknowledges that Addenda No. _____ through _____ have been

delivered to bidder and have been examined as part of the Contract Documents.

20 In the prosecution of this work, the bidder proposes to use the subcontractors listed on the First-Tier Subcontractor Disclosure Form presented within two working hours of the bid submission deadline as set forth in the Invitation to Bid. Any bidder not using subcontractors subject to the above referenced Disclosure Form shall indicate "NONE" on the Disclosure Form and sign and submit the form as

required.

21 Declaration of Residency:

I "am" or "am not" (circle one) a "resident bidder"* as defined by ORS 279A.120, a contractor that has paid unemployment taxes or income taxes in Oregon during the 12 calendar months immediately preceding submission of the bid, has a business address in this state and has stated in the bid whether the bidder is a "resident bidder" pursuant to ORS 279A.120.

22 The bidder's Construction Contractors Board License Number or Landscape Contractors Board License Number is:

23 Bidder's Tax Identification Number:

24 Public Works Bond: If the bid is accepted, prior to beginning work on the project, the bidder will file with the Construction Contractors Board, a Public Works Bond in the amount of $30,000 with a corporate surety authorized to do business in the State of Oregon; and before permitting a subcontractor to begin work on the project, the bidder will verify that the subcontractor has also filed the aforementioned bond. If the bidder, as a certified disadvantaged, minority, women or emerging small business enterprise, elects not to file the Public Works Bond, bidder will file written verification of such certification with the Construction Contractors Board and provide the Board and Roseburg Urban Sanitary Authority with notice of such election.

Signatures

If sole Proprietor or Partnership:

In witness hereto, the undersigned as set his/her hand this_____day of_____, 2020.

Signature of Bidder

_____

Title:

_____

If Corporation:

In witness whereof, the undersigned corporation has caused this instrument to be executed and its seal affixed by its duly authorized officers this____day of_____, 2020.

Name of Corporation:

_____

By:

Title:

_____

Attest:

_____

Secretary

ROSEBURG URBAN SANITARY AUTHORITY

STANDARD BID BOND FORM

We,_____, "as Principal,"
(Name of Principal) and_____,an_____Corporation,
(Name of Surety)

authorized to transact Surety business in Oregon, as "Surety," hereby jointly and severally bind ourselves, our respective heirs, executors, administrators, successors and assigns to pay unto the Roseburg Urban Sanitary Authority ("Oblige") the sum of ( )

_____ dollars.

WHEREAS, the condition of the obligation of this bond is that Principal has submitted its proposal or bid to an agency of the Oblige in response to Oblige's procurement document (No.) for the project identified as: Hooker Road Sewer Project, which proposal or bid is made a part of this bond by reference, and Principal is required to furnish bid security in an amount equal to ten percent (10%) of the total amount of the bid pursuant to the procurement document and ORS 279C.365(4) for competitive bidding or 279C.400(5) for competitive proposals.

NOW, THEREFORE, if the proposal or bid submitted by Principal is accepted, and if a contract pursuant to the proposal or bid is awarded to Principal, and if Principal enters into and executes such contract within the time specified in the procurement document and executes and delivers to Oblige its good and sufficient performance bond, payment bond and public works bond as required by Oblige within the time fixed by Oblige, then this obligation shall be void; otherwise, it shall remain in full force and effect.

IN WITNESS WHEREOF, we have caused this instrument to be executed and sealed by our duly authorized legal representatives this _____ day of _____, 2020.

PRINCIPAL: SURETY: _____

By_____ BY ATTORNEY-IN-FACT:
Signature

_____ _____
Official Capacity Name

Attest: _____ _____
Corporation Secretary Signature

Address _____

_____
City State Zip

_____
Phone Fax

FIRST TIER SUBCONTRACTOR DISCLOSURE FORM

PROJECT NAME: *Hooker Road Sewer Project*
BID#:_____

BID CLOSING: DATE: TIME: _____

This form must be submitted at the location specified in the Invitation to Bid on the advertised bid closing date and within two working hours after the advertised bid closing time.

List below the name of each subcontractor that will be furnishing labor or labor and materials, and is required to be disclosed, the category of work that the subcontractor will be performing and the dollar value of the subcontract. Enter "NONE" if there are no subcontractors that need to be disclosed. (ATTACH ADDITIONAL SHEETS IF NEEDED)

NAME OF SUBCONTRACTOR	DOLLAR VALUE	CATEGORY OF WORK
1.	$	
2.	$	
3.	$	
4.	$	
5.	$	
6.	$	

Failure to submit this form by the disclosure deadline will result in a nonresponsive bid. A nonresponsive bid will not be considered for award.

Form submitted by (bidder name): _____

Contact name: **Phone:** _____

Form Received in the RUSA's Office:

Time:_____**Date:** _____ **By:** _____

DRUG TESTING PROGRAM CERTIFICATION FORM

BIDDER'S NAME: _____

PROJECT NAME & NUMBER: *Hooker Road Sewer Project*

ORS 279C.505 (2) provides that every public improvement contract contain a condition that the Contractor shall demonstrate than an employee drug testing program is in place. The Agency's award of the Contract for which this certificate is required is conditioned, in part, upon the Bidder's demonstration of compliance with the provisions of ORS 279C.505(2). If the Bidder named above is awarded the Contract, this certificate shall become a part of, and shall constitute a continuing representation and warranty under, the Contract.

To induce the Agency to award the Contract to the Bidder, the undersigned, as the duly authorized representative of the Bidder, hereby represents and warrants, on behalf of the above named Bidder:

1. That Bidder has and enforces, and at all times during the term of the Contract will have and enforce, a written employee drug testing policy that at a minimum, requires compliance with the Oregon Department of Transportation Commercial Drivers License drug testing regulations;
2. A copy of the Bidder's current written employee drug testing policy will be available for inspection by the Agency at any time upon the Agency's request; and
3. The Bidder understands and agrees that its representations and warranties herein will become a continuing part of the Contract and that breach of any of the foregoing will be sufficient grounds for disqualification under 279C.440(2)(d).

The Agency shall not be liable, either directly or indirectly, in any dispute arising out of the substance or procedure of Bidder/Contractor's drug testing program. Nothing in this drug testing provision shall be construed as requiring Bidder/Contractor to violate any legal, including constitutional, rights of any employee, including but not limited to, selection of which employees to test and the manner of such testing. The Agency shall not be liable for Bidder/Contractor's negligence in establishing or implementing, or failure to establish or implement, a drug testing policy, or for any damage or injury caused by Bidder/Contractor's employees acting under the influence of drugs while performing work covered by the Contract. These are Bidder/Contractor's sole responsibilities.

In Witness whereof, the Bidder has caused this document to be executed by it's duly authorized representative on the date shown below.

Signature: _____

Printed Name, Title: _____

Date: _____

PUBLIC WORKS BOND
PRE-BID NOTICE AND CERTIFICATION

I, the undersigned contractor, hereby certify that if awarded the contract for which I am submitting this bid, prior to beginning work on such Project, unless exempt under ORS 279C.800 to 279C.870, I will file with the Construction Contractors Board, a Public Works Bond in the amount of $30,000 with a corporate surety authorized to do business in the State of Oregon. I further certify that before permitting a subcontractor to start work on the Project upon which I am submitting this bid, I will verify that the subcontractor has also filed such Public Works Bond or has elected not to file such bond as allowed by state law. The Public Works Bond shall provide that the contractor or subcontractor will pay claims ordered by the Bureau of Labor and Industries to workers performing labor upon public works projects. The bond shall be a continuing obligation and remain continuously in effect.

If, as a contractor, I qualify as a disadvantaged, minority, women or emerging small business enterprise certified under ORS 200.055 and I have elected not to file the aforementioned Public Works Bond, I hereby certify that I will file written verification of such certification with the Construction Contractors Board. I also certify that before beginning any work on the Project, I will provide the Roseburg Urban Sanitary Authority and the Construction Contractors Board written notice that I have elected not to file the Public Works Bond. If so certified under ORS 200.055, I understand that my election not to file the Public Works Bond will expire one year from the date it was filed and that a claim for unpaid wages may be filed against the payment bond I submitted on the Project.

I further certify that I understand the Public Works Bond described above is in addition to any other bond that I am required to provide, or that may be required of a subcontractor, for this Project.

Project Name: *Hooker Road Sewer Project*

Contractor's Printed Name: _____

Contractor's Signature: _____

Dated:

CONSTRUCTION CONTRACT

This Contract is made and entered into this_____day of_____, 2020, by and between _____ , hereinafter called the "Contractor", and the Roseburg Urban Sanitary Authority, a public authority of the State of Oregon, hereinafter called "RUSA ".

WITNESSETH

That the Contractor and RUSA, for the consideration hereinafter described agree as follows:

1. **WORK TO BE PERFORMED.** The Contractor agrees to do all the work and furnish all necessary labor, materials, tools and equipment for the completion of the ***Hooker Road Sewer Project*** in accordance with the bid made by the Contractor on the _____day of_____, all in full compliance with the Contract Documents referred to herein, and guarantees all materials and workmanship for one year after acceptance of the project.

2. **CONTRACT DOCUMENTS.** The Contract Documents include the RUSA's Invitation to Bid, Information to Bidders, the Bid Form signed by the Contractor, this Construction Contract, First-Tier Subcontractor Disclosure Form, Drug Testing Program Certification Form, Performance Bond, Payment Bond, Public Works Bond Filing Certification form (when required), Standard Drawings and Plans, and other Supplemental Agreements all as required for the full execution and satisfactory completion of the work. All of the Contract Documents are incorporated herein by this reference and made a part of this Contract.

3. **PAYMENT.** In consideration of the faithful performance of the work herein embraced, RUSA agrees to pay the Contractor **$_____**as payment in full per the provisions of the Contract Documents.

4. **TIME OF PERFORMANCE - LIQUIDATED DAMAGES.** The Contractor shall commence work under this Contract upon receiving notification to proceed from the RUSA. The Contractor agrees that the work under this Contract shall be completed in its entirety on or before June 30, 2021. If the Contractor fails to complete the Project within the time hereinbefore mentioned, or in the extended time agreed upon, liquidated damages shall be paid to or withheld by the RUSA until Project is completed. It has also been agreed that the amount of liquidated damages specified herein is a reasonable forecast of just compensation for the harm that will be caused by a delay in completion of the Project. Any such sum which the Contractor may be obligated to pay under the terms of this Paragraph is paid as liquidated damages, and not as a penalty.

5. **COMPLIANCE WITH LAW.** The Contractor shall comply with all local, state and federal laws, ordinances and regulations applicable to contracts covering municipal contracts, and shall make prompt payment of all amounts that may be due from said Contractor in the way of taxes, other governmental charges or lawful deductions, and shall make prompt payment of all labor and materials and shall save the RUSA harmless from any damages or claims whatsoever in the performance of the Contract. Contractor and all subcontractors agree to comply with the Roseburg Municipal Code Regulations relating to business registration.

6. **NOTICE.** Any notice required or permitted by this Contract must be delivered and served personally, or alternatively, deposited in the United States mail, postage prepaid, registered or certified, return receipt requested, addressed to the parties as shown below:

RUSA:
Roseburg Urban Sanitary Authority
ATTN: Jim Baird
1297 NE Grandview Dr.
Roseburg OR 97470

CONTRACTOR:

ATTN:

Such notice, if mailed within the State of Oregon, shall be deemed delivered upon the second day following the date postmarked. If mailed outside the State of Oregon, notice shall be deemed delivered upon the fifth day following the date postmarked.

7. **GOVERNING LAW; VENUE LOCATION.** Oregon law shall be applied to all actions relating to the Contract, and the venue in any such action shall lie in the Circuit Court of Douglas County, Oregon.

IN WITNESS WHEREOF, the parties hereto have executed this Contract the day and year first above written.

RUSA

_____

Jim Baird
General Manager

Date:

CONTRACTOR

_____
(Authorized Signature)

Name/Title: _____

Date: _____

_____
Tax Identification Number

ATTEST:

_____

Roseburg Urban Sanitary Authority
STANDARD PERFORMANCE BOND

Bond No.:

Solicitation: _____
Project Name: *Hooker Road Sewer Project*

_____ (Surety#1)Bond Amount No. 1: $ _____

_____ (Surety #2) *Bond Amount No. 2:$ _____
**If using multiple sureties*

Total Penal Sum of Bond $ _____

We, _____ as Principal, and the above identified Surety(ies), authorized to transact surety business in Oregon, as Surety, hereby jointly and severally bind ourselves, our respective heirs, executors, administrators, successors and assigns, firmly by these presents to pay to the Roseburg Urban Sanitary Authority the sum of (Total Penal Sum of Bond) Provided that we the Sureties bind ourselves in such sum "jointly and severally" as well as "severally" only for the purpose of allowing a joint action or actions against any or all of us, and for all other purposes each Surety binds itself, jointly and severally with the Principal, for the payment of such sum only as is set forth opposite the name of such Surety), and

WHEREAS, the Principal has entered into a contract with the Roseburg Urban Sanitary Authority, the plans, specifications, terms and conditions of which are contained in the above-referenced Solicitation; and

WHEREAS, the terms and conditions of the contract, together with applicable plans, standard specifications, special provisions, schedule of performance, and schedule of contract prices, are made a part of this Performance Bond by reference, whether or not attached to the contract (all hereafter called "Contract"); and

WHEREAS, the Principal has agreed to perform the Contract in accordance with the terms, conditions, requirements, plans and specifications, and all authorized modifications of the Contract which increase the amount of the work, the amount of the Contract, or constitute an authorized extension of the time for performance, notice of any such modifications hereby being waived by the Surety:

NOW, THEREFORE, THE CONDITION OF THIS BOND IS SUCH that if the Principal herein shall faithfully and truly observe and comply with the terms, conditions and provisions of the Contract, in all respects, and shall well and truly and fully do and perform all matters and things undertaken by Contractor to be performed under the Contract, upon the terms set forth therein, and within the time prescribed therein, or as extended as provided in the Contract, with or without notice to the Sureties, and shall indemnify and save harmless Roseburg Urban Sanitary Authority and members thereof, its officers, employees and agents, against any direct or indirect damages or claim of every kind and description that shall be suffered or claimed to be suffered in connection with or arising out of the performance of the Contract by the Principal or its

subcontractors, and shall in all respects perform said Contract according to law, then this obligation is to be void; otherwise, it shall remain in full force and effect.

Nonpayment of the bond premium will not invalidate this bond nor shall Roseburg Urban Sanitary Authority be obligated for the payment of any premiums.

This bond is given and received under authority of ORS Chapters 279A, 279B and 279C, the provisions of which hereby are incorporated into this bond and made a part hereof.

IN WITNESS WHEREOF, WE HAVE CAUSED THIS INSTRUMENT TO BE EXECUTED AND SEALED BY OUR DULY AUTHORIZED LEGAL REPRESENTATIVES.

Dated this_____day of_____, 2020.

PRINCIPAL: _____

By:_____

Signature

_____

Official Capacity

Attest:_____

Corporation Secretary

SURETY: _____

[Add signatures for each surety if using multiple bonds]

BY ATTORNEY-IN-FACT:

[Power-of-Attorney must accompany each surety bond]

_____

Name

_____ _____

Signature

_____

Address

_____

City State Zip

_____

Phone Fax

Roseburg Urban Sanitary Authority
PAYMENT BOND

Bond No.:
Solicitation:

Project Name: *Hooker Road Sewer Project*

_____(Surety#1)Bond Amount No. 1: $ _____

_____(Surety #2) *Bond Amount No. 2:$ _____

**If using multiple sureties*

Total Penal Sum of Bond $ _____

We, _____ as Principal, and the above identified Surety(ies), authorized to

transact surety business in Oregon, as Surety, hereby jointly and severally bind ourselves, our respective heirs, executors, administrators, successors and assigns, firmly by these presents to pay to the Roseburg Urban Sanitary Authority the sum of (Total Penal Sum of Bond)

(Provided that we the Sureties bind ourselves in such sum "jointly and severally" as well as "severally" only for the purpose of allowing a joint action or actions against any or all of us, and for all other purposes each Surety binds itself, jointly and severally with the Principal, for the payment of such sum only as is set forth opposite the name of such Surety), and

WHEREAS, the Principal has entered into a contract with the Roseburg Urban Sanitary Authority, the plans, specifications, terms and conditions of which are contained in the above-referenced Solicitation; and

WHEREAS, the terms and conditions of the contract, together with applicable plans, standard specifications, special provisions, schedule of performance, and schedule of contract prices, are made a part of this Payment Bond by reference, whether or not attached to the contract (all hereafter called "Contract"); and

WHEREAS, the Principal has agreed to perform the Contract in accordance with the terms, conditions, requirements, plans and specifications, and schedule of Contract prices which are set forth in the Contract and any attachments, and all authorized modifications of the Contract which increase the amount of the work, or the cost of the Contract, or constitute authorized extensions of time for performance of the Contract, notice of any such modifications hereby being waived by the Surety:

NOW, THEREFORE, THE CONDITION OF THIS BOND IS SUCH that if the Principal shall faithfully and truly observe and comply with the terms, conditions and provisions of the Contract, in all respects, and shall well and truly and fully do and perform all matters and things by it undertaken to be performed under said Contract and any duly authorized modifications that are made, upon the terms set forth therein, and within the time prescribed therein, or as extended therein as provided by the Contract, with or without notice to the Sureties, and shall indemnify and save harmless the Roseburg Urban Sanitary Authority and members thereof, its officers, employees and agents, against any direct or indirect damages or claim of every kind and description that shall be suffered or claimed to be suffered in connection with or arising out of the performance of the Contract by the Contractor or its subcontractors, and shall promptly pay all persons supplying labor, materials or both to the Principal or its subcontractors for prosecution of the work provided in the Contract; and shall promptly pay all contribution due according to workers compensation requirements and the State Unemployment compensation Fund from the Principal or its subcontractors in connection with the performance of the Contract; and shall pay over to the Oregon Department of Revenue all sums required to be deducted and retained from the wages of employees of the Principal and its subcontractors pursuant to ORS 316.167, and shall permit no lien nor claim to be filed or

prosecuted against Roseburg Urban Sanitary Authority on account of any labor or materials furnished; and do all things required of the Principal by the laws of this State, then this obligation shall be void; otherwise, it shall remain in full force and effect.

Nonpayment of the bond premium will not invalidate this bond nor shall the Roseburg Urban Sanitary Authority be obligated for the payment of any premiums.

This bond is given and received under authority of ORS Chapters 279A, 279B and 279C, the provisions of which hereby are incorporated into this bond and made a part hereof.

IN WITNESS WHEREOF, WE HAVE CAUSED THIS INSTRUMENT TO BE EXECUTED AND SEALED BY OUR DULY AUTHORIZED LEGAL REPRESENTATIVES.

Dated this_____day of_____, 2020.

PRINCIPAL:_____

By: _____
Signature

_____
Official Capacity

Attest: _____
Corporation Secretary

SURETY:

_____

[Add signatures for each surety if using multiple bonds]

BY ATTORNEY-IN-FACT:
[Power-of-Attorney must accompany each surety bond]

_____
Name

_____
Signature

_____ _____
Address

_____
City State Zip

_____
Phone Fax

PUBLIC WORKS BOND FILING CERTIFICATION

Pursuant to ORS 279C.800 to 279C.870, I, undersigned contractor, do hereby certify that, prior to beginning work on the Project for which I have been awarded the bid by the Roseburg Urban Sanitary Authority:

1. I have filed with the Construction Contractors Board ("Board"), a Public Works Bond in the amount of $30,000 with a corporate surety authorized to do business in the State of Oregon. **_Yes _No (Check one)**

2. I have elected not to file a Public Works Bond with the Board because I am a disadvantaged, minority, women or emerging small business enterprise certified under ORS 200.055. I have provided the Board written verification of such certification and written notification of my election not to file the Public Works Bond. I understand that my election not to file the Public Works Bond will expire one year from the date it was filed and that a claim for unpaid wages may be filed against the payment bond I submitted on the Project. _____**Yes** **____No (Check one)**

3. I have verified any subcontractor involved in the Project has, prior to beginning any work on this Project, either filed the Public Works Bond with the Board or has elected not to file the Public Works Bond because the subcontractor is a disadvantaged, minority, women or emerging small business enterprise certified under ORS 200.055.**_____Yes** **_____No (Check one)**

(a) I have verified that any subcontractor involved in this Project that has elected not to file the Public Works Bond has provided the Board written verification of its certification under ORS 200.055 and written notification of its election not to file the Public Works Bond. _____**Yes** _____**No (Check one)**

I understand the Public Works Bond described above is in addition to any other bond that I am required to provide, or that may be required by a subcontractor, for this Project.

Project Name:_____*Hooker Road Sewer Project*

Project Number:_____

Contractor's Printed Name:

Contractor's Signature: _____

Dated:

BUREAU OF LABOR AND INDUSTRIES
PREVAILING WAGE RATES
FOR
PUBLIC WORKS CONTRACTS IN OREGON

Prevailing Wage Rates are the minimum wages that must be paid to all workers employed in the construction, reconstruction, major renovation or painting of all public works, unless specifically exempted by state law. Effective May 15, 2006, the Bureau of Labor and Industries (BOLI) deleted the requirement that the applicable Prevailing Wage Rates be physically included in all bid specifications and contracts for projects subject to the Prevailing Wage Rate law. Instead of including the entire Prevailing Wage Rate publication in the bid specifications and contract, public entities must now simply make reference to the specific prevailing wage rate publication where the prevailing wage rates are found *or* provide a link to the specific prevailing wage rate publication where the prevailing wage rates are found.

In January and July of each year, the Commissioner of the Bureau of Labor and Industries publishes the Prevailing Wage Rates that are required to be paid to workers on public works contracts in the state of Oregon. Quarterly updates are published in April and October of each year. Oregon Bureau of Labor and Industries Prevailing Wage Rates applicable to the subject project/contract are available on BOLI's website at www.oregon.gov/boli/. The prevailing wages to be applied throughout the duration of this project are those in effect for BOLI Prevailing Wage Rate Region 6, (Douglas County Oregon), upon the date the project is first advertised.

For specific information or questions regarding the Prevailing Wage Rate Law, you may log on to the above referenced website or contact the nearest Oregon Bureau of Labor and Industries office listed below.

BOLI Office Locations

Eugene	1400 Executive Parkway, Eugene, OR 97401	541/686-7623
Medford	700 E. Main, Suite 105, Medford, OR 97504	541/776-6270
Portland	800 NE Oregon St., #32, Portland, OR 97232	503/731-4074
Salem	3865 Wolverine St. NE, Bldg. E-1, Salem, OR 97305	503/378-3292

THIS PROJECT IS SUBJECT TO THE PREVAILING WAGE RATES EFFECTIVE July 1, 2020 and the AMENDMENTS PUBLISHED PRIOR TO THE BID DATE

OREGON STANDARD SPECIFICATIONS FOR CONSTRUCTION

Modified General Conditions
(Volume 1)
2015

Roseburg Urban Sanitary Authority
Roseburg, Oregon

Oregon Standard Specifications for Construction, Volume 1, 2015 contains Part 00100, the general conditions. Volume 2 contains Parts 00200 through 03000, the Technical Specifications, which describe the prosecution of the work. These general conditions contained in these provisions have been modified for the use of Roseburg Urban Sanitary Authority. The Oregon Standard Specifications for Construction are joint specifications from the Oregon Department of Transportation and the American Public Works Association, Oregon Chapter.

August 2016

TABLE OF CONTENTS

Section 00110 - Organization, Conventions, Abbreviations, and Definitions 1
00110.00 Organization of Specifications 1
00110.05 Conventions Used Throughout the Specifications Include 1
00110.10 Abbreviations 3
00110.20 Definitions 5
Section 00120 - Bidding Requirements and Procedures 14
00120.00 Prequalification of Bidders 14
00120.01 General Bidding Requirements 14
00120.05 Requests for Solicitation Documents 14
00120.10 Bid Booklet 14
00120.15 Examination of Work Site and Solicitation Documents; Consideration of Conditions to be Encountered 15
00120.16 Material, Equipment, and Method Substitutions 15
00120.30 Changes to Plans, Specifications, or Quantities before Opening of Bids .. 16
00120.40 Preparation of Bids: 16
00120.45 Submittal of Bids 19
00120.60 Revision or Withdrawal of Bids 19
00120.65 Opening and Comparing Bids 19
00120.70 Rejection of Nonresponsive Bids 20
00120.80 Reciprocal Preference for Oregon Resident Bidders 20
00120.90 Disqualification of Bidders 21
00120.91 Rejection of Bid on Grounds of Nonresponsibility of Bidder 21
Section 00130 - Award and Execution of Contract 22
00130.00 Consideration of Bids 22
00130.10 Award of Contract 22
00130.15 Right to Protest Award 23
00130.20 Cancellation of Award 23
00130.30 Contract Booklet 23
00130.40 Contract Bonds, Certificates, and Registrations 24
00130.50 Execution of Contract and Bonds 25
00130.60 Failure to Execute Contract and Bonds 25
00130.70 Release of Bid Guaranties 26
00130.80 Project Site Restriction 26
00130.90 Notice to Proceed 26
Section 00140 - Scope of Work 27
00140.00 Purpose of Contract 27
00140.10 Typical Sections 27
00140.30 Agency-Required Changes in the Work 27
00140.50 Environmental Pollution Changes 28

00140.60 Extra Work 28
00140.65 Disputed Work 28
00140.70 Cost Reduction Proposals 28
00140.80 Use of Publicly Owned Equipment 30
00140.90 Final Trimming and Cleanup 30
Section 00150 - Control of Work 32
00150.00 Authority of the Engineer 32
00150.01 Project Manager's Authority and Duties 32
00150.02 Inspector's Authority and Duties 32
00150.10 Coordination of Specifications and Plans 33
00150.20 Inspection 33
00150.25 Acceptability of Materials and Work 34
00150.30 Delivery of Notices 35
00150.35 Plans and Working Drawings 35
00150.37 Equipment Lists and Other Submittals 36
00150.40 Cooperation and Superintendence by the Contractor 36
00150.55 Cooperation with Other Contractors 38
00150.70 Detrimental Operation 39
00150.80 Removal of Unacceptable and Unauthorized Work 39
00150.90 Final Inspection 39
00150.95 Final Acceptance 40
00150.96 Maintenance Warranties and Guarantees 40
00150.97 Responsibility for Materials and Workmanship 40
Section 00160 - Source of Materials 41
00160.00 Definitions 41
00160.01 Notification of Source of Supply and Materials 41
00160.20 Preferences for Materials 41
00160.30 Agency-Furnished Materials 41
00160.60 Contractor-Furnished Materials and Sources 42
Section 00165 – Quality of Material 43
00165.00 General 43
00165.01 Rejected Materials 43
00165.02 Materials Conformance and Quality Compliance Documents 43
00165.03 Testing by Agency 43
00165.04 Costs of Testing 43
Section 00170 - Legal Relations and Responsibilities 44
00170.00 General 44
00170.01 Other Agencies Affecting Agency Contracts 44
00170.02 Permits, Licenses, and Taxes 46
00170.03 Furnishing Right-of-Way and Permits 46
00170.04 Patents, Copyrights, and Trademarks 46
00170.05 Assignment of Antitrust Rights 46
00170.10 Required Payments by Contractors 47

00170.20 Public Works Bond 48
00170.32 Protection of Navigable Waters 49
00170.60 Safety, Health, and Sanitation Provisions 49
00170.61 Industrial Accident Protection 49
00170.62 Labor Nondiscrimination 49
00170.63 Payment for Medical Care 49
00170.65 Minimum Wage and Overtime Rates for Public Works Projects 49
00170.70 Insurance 52
00170.71 Independent Contractor Status 56
00170.72 Indemnity/Hold Harmless 56
00170.74 Employee Drug Testing Program 56
00170.78 Conflict of Interest 57
00170.79 Third Party Beneficiary 57
00170.80 Responsibility for Damage to Work 57
00170.82 Responsibility for Damage to Property and Facilities 58
00170.85 Responsibility for Defective Work 58
Section 00180 - Prosecution and Progress 61
00180.00 Scope 61
00180.05 Assignment/Delegation of Contract 61
00180.06 Assignment of Funds Due under the Contract 61
00180.10 Responsibility for Contract 61
00180.15 Agency's Right to Do Work at Contractor's Expense 62
00180.20 Subcontracting Limitations 62
00180.21 Subcontracting 63
00180.22 Payments to Subcontractors and Agents of the Contractor 65
00180.30 Materials, Equipment, and Work Force 66
00180.31 Required Materials, Equipment, and Methods 66
00180.32 Alternative Materials, Equipment, and Methods 67
00180.40 Limitation of Operations 68
00180.41 Project Work Schedules 68
00180.42 Preconstruction Conference 68
00180.43 Commencement and Performance of Work 68
00180.50 Contract Time to Complete Work 68
00180.60 Notice of Delay 71
00180.70 Suspension of Work 71
00180.80 Adjustment of Contract Time 72
00180.85 Failure to Complete on Time; Liquidated Damages 74
00180.90 Termination of Contract and Substituted Performance 75
Section 00190 - Measurement of Pay Quantities 77
Section 00195 - Payment 78
00195.00 Scope and Limit 78
00195.20 Changes to Plans or Character of Work 78

00195.30 Differing Site Conditions 79
00195.40 Unreasonable Delay by the Agency 79
00195.50 Progress Payments and Retained Amounts 80
00195.60 Advance Allowance for Materials on Hand 82
00195.70 Payment under Terminated Contract 84
00195.80 Allowance for Materials Left on Hand 85
00195.90 Final Payment 85
00195.95 Error in Final Quantities and Amounts 86
Section 00196 - Payment for Extra Work 87
00196.00 General 87
00196.10 Negotiated Price 87
00196.20 Force Account 87
Section 00197 - Payment for Force Account Work 88
00197.00 Scope 88
00197.01 General 88
00197.10 Materials 88
00197.20 Equipment 89
00197.30 Labor 91
00197.40 Invoices for Special Services 92
00197.80 Percentage Allowances 92
00197.90 Billings 93
Section 00199 - Disagreements, Protests and Claims 94
00199.00 General 94
00199.10 Procedure for Resolving Disagreements 94
00199.20 Protest Procedure 94
00199.30 Claims Procedure 95
00199.40 Claim Decision; Review; Exhaustion of Administrative Remedies 99
00199.50 Mediation 101

PART 00100 - GENERAL CONDITIONS

Section 00110 - Organization, Conventions, Abbreviations, and Definitions

NOTE: *Volume 1 of the 2015 "Oregon Standard Specifications for Construction", Joint specifications of the Oregon Department of Transportation and the Oregon Chapter of the American Public Works Association is hereby referenced in general and is modified by these provisions for general use of the Roseburg Urban Sanitary Authority(RUSA), Roseburg, Oregon. Any reference to Agency is implied to refer to RUSA. These provisions control in the event of any conflict.*

00110.00 Organization of Specifications

The Specifications are comprised of the following:

- The "2018 Oregon Standard Specifications for Construction", Volume 1, which contain Part 00100 "General Conditions", which deal with the solicitation process and contractual relationships;
- The "2018 Oregon Standard Specifications for Construction", Volume 2, which contain Parts 00200 through 03000 of the detailed "Technical Specifications" involved in prosecution of the Work, organized by subject matter;
- Supplemental Specifications, if any.

In addition, throughout the Specifications:

- Each Part is divided into Sections and Subsections.
- Reference to a Section includes all applicable requirements of the Section.
- When referring to a Subsection, only the number of the Subsection is used; the word "Subsection" is implied.
- Where Section and Subsection numbers are not consecutive, the interval has been reserved for use in the Special Provisions, Supplemental Specifications, or future expansion of the Standard Specifications.

00110.05 Conventions Used Throughout the Specifications Include:

(a) Grammar - The "2018 Oregon Standard Specifications for Construction", Volume 1, which contain Part 00100 "General Conditions", are written in the indicative mood, in which the subject is expressed. The "2018 Oregon Standard Specifications for Construction", Volume 2, which contain Parts 00200 through 03000 of the detailed "Technical Specifications", are generally written in the imperative mood, in which the subject is implied. Therefore, throughout Parts 00200 through 03000, and on the Plans:

- The subject, "the Contractor", is implied.
- "Shall" refers to action required of the Contractor, and is implied.
- "Will" refers to decisions or actions of the Agency and/or the Engineer.
- The following words, or words of equivalent meaning, refer to the actions of the Agency and/or the Engineer, unless otherwise stated: "allowed", "directed",

"established", "permitted", "ordered", "designated", "prescribed", "required", "determined".

- The words "approved", "acceptable", "authorized", "satisfactory", "suitable", "considered", and "rejected", "denied", "disapproved", or words of equivalent meaning, mean by or to the Agency and/or the Engineer, subject in each case to Section 00150 of the General Conditions.
- The words "as shown", "shown", "as indicated", or "indicated" mean "as indicated on the Plans".
- Certain Subsections labeled "Payment" contain statements to the effect that "payment will be made at the Contract amounts for the following items" (followed by a list of items). In such cases the Agency shall pay for only those Pay Items listed in the Schedule of Items. 00110.05(b)

(b) Capitalization of Terms - Capitalized terms, other than titles, abbreviations, and grammatical usage, indicate that they have been given a defined meaning in the Standard Specifications and Supplemental Specifications. Refer to Section 00110.20 "Definitions". Defined terms will always be capitalized in Part 00100; in Parts 00200 through 03000, defined terms will generally not be capitalized, with the notable exception of "the Contractor", "the Agency", and "the Engineer".

(c) Punctuation - In this publication the "outside method" of punctuation is employed for placement of the comma and the period with respect to quotation marks. Only punctuation that is part of the quoted matter is placed within quotation marks.

(d) References to Laws, Acts, Regulations, Rules, Ordinances, Statutes, Orders, and Permits - References are made in the text of the Specifications to "laws", "acts", "rules", "statutes", "regulations", "ordinances", etc. (collectively referred to for purposes of this Subsection as "Law"), and to "orders" and "permits" (issued by a governmental authority, whether local, State, or federal, and collectively referred to for purposes of this Subsection as "Permits"). Reference is also made to "applicable laws and regulations". The following conventions apply in interpreting these terms, as used in the Specifications.

- **Statutes and Rules** - Oregon Revised Statutes (ORS) and Oregon Administrative Rules (OAR) referenced in the Specifications are accessible on line, including through the Oregon Legislative Counsel Committee web site and through the Oregon Secretary of State Archives Division web site.
- **Law** - In each case, unless otherwise expressly stated therein, the Law is to be understood to be the current version in effect. This also applies where a specific Law is referenced or cited, regardless of whether the text of the Law has been included in the Specifications or not, and regardless of whether the text of the Law has been summarized or paraphrased. In each case, the current version of the Law is applicable under any Contract. The reader is therefore cautioned to check the actual text of the Law to confirm that the text included in the Specifications has not been modified or superseded.

- **Permits** - Orders and permits issued by a government agency may be modified during the course of performing the Work under a Contract. Therefore, wherever the term "order" or "permit" is used in the Specifications, it is intended to refer to the then-current version. That version may be embodied in a modified, superseding order or permit, or it may consist of all terms and conditions of prior orders or permits that have not been superseded, as well as the additional terms added by amendment or supplement. In certain cases, the orders and/or permits are identified by name in the Specifications; in other cases the terms are used in the generic sense. The reader is cautioned to check the text(s) of each order and permit identified either by name or by generic reference.
- **Applicable Laws and Regulations** - Where the phrase "applicable laws and regulations" appears, it is to be understood as including all applicable laws, acts, regulations, administrative rules, ordinances, statutes, and orders and permits issued by a governmental or regulatory authority.

00110.10 Abbreviations

Following are meanings of abbreviations used in the Standard Specifications, the Supplemental Specifications, in the Special Provisions, on the Plans, and in other Contract Documents. Other abbreviations and meanings of abbreviations may be in the individual Sections of the Standard Specifications to which they apply, in the Supplemental Specifications, in the Special Provisions, and in OAR 731-005 and OAR 731-007.

AAR - Association of American Railroads
AASHTO - American Association of State Highway and Transportation Officials
ABC - Associated Builders and Contractors, Inc.
AC - Asphalt Concrete
ACI - American Concrete Institute
ACWS - Asphalt Concrete Wearing Surface
AGC - Associated General Contractors of America
AIA - American Institute of Architects
AISC - American Institute of Steel Construction
AISI - American Iron and Steel Institute
AITC - American Institute of Timber Construction
ANSI - American National Standards Institute
APA - American Plywood Association
APWA - American Public Works Association
ARA - American Railway Association
AREA - American Railway Engineering Association
ASCE - American Society of Civil Engineers
ASME - American Society of Mechanical Engineers
ASTM - American Society for Testing and Materials
ATPB - Asphalt-Treated Permeable Base
AWG - American Wire Gauge
AWPA - American Wood Preservers Association
AWS - American Welding Society
AWWA - American Water Works Association

CAgT - Certified Aggregate Technician
CAT-I - Certified Asphalt Technician I
CAT-II - Certified Asphalt Technician II
CBM - Certified Ballast Manufacturers
CIPP - Cured-in-Place Pipe
CCO - Contract Change Order
CCT - Concrete Control Technician
CDT - Certified Density Technician
CEBT - Certified Embankment and Base Technician
CMDT - Certified Mixture Design Technician
CPF - Composite Pay Factor
CRSI - Concrete Reinforcing Steel Institute
CFR - Code of Federal Regulations
CS - Commercial Standard, Commodity Standards Division, U.S. Department of Commerce
D1.1 - Structural Welding Code - Steel, American Welding Society, current edition
D1.5 - Bridge Welding Code, American Welding Society, current edition
DBE - Disadvantaged Business Enterprise
DEQ - Department of Environmental Quality, State of Oregon
DOGAMI - Department of Geology and Mineral Industries, State of Oregon
DSL - Division of State Lands, State of Oregon
EAC - Emulsified Asphalt Concrete
EPA - U.S. Environmental Protection Agency
ESCP - Erosion and Sediment Control Plan
FHWA - Federal Highway Administration, U.S. Department of Transportation
FSS - Federal Specifications and Standards, General Services Administration
GSA - General Services Administration
HMAC - Hot Mixed Asphalt Concrete
ICEA - Insulated Cable Engineers Association (formerly IPCEA)
IES - Illuminating Engineering Society
IMSA - International Municipal Signal Association
ISO - International Standards Organization
ITE - Institute of Transportation Engineers
JMF - Job Mix Formula
MFTP - Manual of Field Test Procedures (ODOT)
MH - Manhole
MIL - Military Specifications
MSC - Minor Structure Concrete
MUTCD - Manual on Uniform Traffic Control Devices for Streets and Highways, FHWA, U.S. Department of Transportation
NEC - National Electrical Code
NEMA - National Electrical Manufacturer's Association
NESC - National Electrical Safety Code
NIST - National Institute of Standards and Technology
NPDES - National Pollutant Discharge Elimination System
NPS - Nominal Pipe Size (dimensionless)
OAR - Oregon Administrative Rules

ODA - Oregon Department of Agriculture
ODOT - Oregon Department of Transportation
ORS - Oregon Revised Statutes
OR-OSHA - Oregon Occupational Safety and Health Division of the Department of Consumer and Business Services
OSHA - Occupational Safety and Health Administration, U.S. Department of Labor
PCA - Portland Cement Association
PCI - Precast/Prestressed Concrete Institute
PCP - Pollution Control Plan
PF - Pay Factor of a constituent
PLS - Professional Land Surveyor
PMBB - Plant Mixed Bituminous Base
PTI - Post-Tensioning Institute
PUC - Public Utility Commission, State of Oregon
QA - Quality Assurance
QC - Quality Control
QCT - Quality Control Technician
QL - Quality Level
QPL - Qualified Products List
RAP - Reclaimed Asphalt Concrete Pavement
REA - Rural Electrification Administration, U.S. Department of Agriculture
RMA - Radio Manufacturers Association or Rubber Manufacturers Association
RUSA - Roseburg Urban Sanitary Authority
SAE - Society of Automotive Engineers
SI - International System of Units (Système Internationale)
SRCM - Soil and Rock Classification Manual (ODOT)
SSPC - Society for Protective Coatings
T - Tolerances, AASHTO Test Method
TM - Test Method (ODOT)
TV - Target Value
UBC - Uniform Building Code (as adopted by the State of Oregon)
UL - Underwriters Laboratory, Inc.
UPC - Uniform Plumbing Code (as adopted by the State of Oregon)
USC - United States Code
WAQTC - Western Alliance for Quality Transportation Construction
WCLIB - West Coast Lumber Inspection Bureau
WWPA - Western Wood Products Association

00110.20 Definitions

Following are definitions of words and phrases used in the Standard Specifications, the Supplemental Specifications, in the Special Provisions, on the Plans, and in other Contract Documents. Other definitions may be in the individual Sections of the Standard Specifications to which they apply, in the Supplemental Specifications, in the Special Provisions, and in OAR 731-005 and OAR 731-007.

Act of God or Nature - A natural phenomenon of such catastrophic proportions or intensity as would reasonably prevent performance.

Addendum - A written or graphic modification, issued before the opening of Bids, which revises, adds to, or deletes information in the Solicitation Documents or previously issued Addenda. **Additional Work** - Increased quantities of any Pay Item, within the scope of the Contract, for which a unit price has been established.

Advertisement - The public announcement (Notice to Contractors) inviting Bids for Work to be performed or Materials to be furnished.

Agency - The city, county, or State agency or special district or political subdivision, as applicable, which has entered into a Contract with the Contractor. For the purpose of this document, Agency is considered to be the Roseburg Urban Sanitary Authority.

Agency-Controlled Lands - Lands owned by the Agency, or controlled by the Agency under lease or agreement, or under the jurisdiction and control of the Agency for the purposes of the Contract.

Aggregate - Rock of specified quality and gradation.

Attorney in Fact - An Entity appointed by another to act in its place, either for some particular purpose, or for the transaction of business in general.

Award - Written notification to the Bidder that the Bidder has been awarded a Contract.

Base - A Course of specified material of specified thickness placed below the Pavement.

Bid - A competitive offer, binding on the Bidder and submitted in response to an invitation to bid.

Bid Bond - The Surety bond for Bid guarantee.

Bid Booklet - The bound paper version included in the Solicitation Documents that contain the information identified in 00120.10.

Bid Closing - The date and time after which Bids, Bid modifications, and Bid withdrawals will no longer be accepted.

Bid Documents - See under Solicitation Document.

Bid Opening - The date and time Bids are opened.

Bid Schedule - The list of Pay Items, their units of measurement, and estimated quantities. (When a Contract is awarded, the Bid Schedule becomes the Schedule of Items.)

Bid Section - The portion of the Bid Booklet containing all pages after the Bidder's checklist and before the appendix.

Bidder - An Entity that submits a Bid in response to an invitation to bid.

Boulders - Particles of rock that will not pass a 12 inch square opening.

Bridge - A single or multiple span Structure, including supports, that carries motorized and non-motorized vehicles, pedestrians, or utilities on a Roadway, walk, or track over a watercourse, highway, railroad, or other feature.

Calendar Day - Any day shown on the calendar, beginning and ending at midnight.

Camber - A slight arch in a surface or Structure to compensate for loading.

Change Order - A written order issued by the Engineer to the Contractor modifying Work required by the Contract, or adding Work within the scope of the Contract, and, if applicable, establishing the basis of payment for the modified Work.

Changed Work - Work included in a Pay Item and within the scope of the Contract that is different from that reflected in the Plans and Specifications. (see 00140.30)

Clay - Soil passing a No. 200 sieve that can be made to exhibit plasticity (putty-like properties) within a range of water contents.

Close Conformance - Where working tolerances are given on the Plans or in the Specifications, Close Conformance means compliance with those tolerances. Where working tolerances are not given, Close Conformance means compliance, in the Engineer's judgment, with reasonable and customary manufacturing and construction tolerances.

Coarse Aggregate - Crushed Rock or crushed Gravel retained on a 1/4 inch sieve, with allowable undersize.

Cobbles - Particles of Rock, rounded or not, that will pass a 12 inch square opening and be retained on a 3 inch sieve.

Commercial Grade Concrete - Concrete furnished according to Contractor proportioning, placed in minor Structures and finished as specified.

Contract - The written agreement between the Agency and the Contractor, including without limitation all Contract Documents, describing the Work to be completed and defining the rights and obligations of the Agency and the Contractor.

Contract Administration Engineer - The Agency representative presiding over Agency-level claims review under 00199.40.

Contract Amount - Sum of the Pay Item amounts computed by multiplying the Pay Item quantities by the unit prices in the Schedule of Items.

Contract Documents - Solicitation Documents, Contract booklet, Change Orders, Force Account Work orders, pay documents issued by the Agency, Materials certifications, Project Work schedules, final estimate, written orders and authorizations issued by the Agency, approved Plans, Material source development and reclamation plans, and permits, orders and authorizations obtained by the Contractor or Agency applicable to the Project, as well as all documents incorporated by reference therein.

Contract Time - The amount of time allowed to complete the Work under the Contract.

Contractor - The Entity awarded the Contract according to the solicitation.

Course - A specified Surfacing Material placed in one or more Lifts to a specified thickness.

Coverage - One Pass by a piece of Equipment over an entire designated area.

Cross Section - The exact image formed by a plane cutting through an object, usually at right angles to a central axis, to determine area.

Day - A Calendar Day including weekdays, weekends, and holidays, unless otherwise specified.

Durable Rock - Rock that has a slake durability index of at least 90% based on a two-cycle slake durability test, according to ASTM D 4644. In the absence of test results, the Engineer may evaluate the durability visually.

Emulsified Asphalt - Emulsified asphalt cement.

Emulsified Asphalt Concrete - A mixture of Emulsified Asphalt and graded Aggregate.

Engineer - The Chief Engineer of the Agency acting either directly or through authorized representatives. If the Agency has not designated a Chief Engineer, this term denotes the person responsible for administering its public works program.

Entity - A natural person capable of being legally bound, sole proprietorship, limited liability company, corporation, partnership, limited liability partnership, limited partnership, profit or nonprofit unincorporated association, business trust, two or more persons having a joint or common economic interest, or any other person with legal capacity to contract, or a government or governmental subdivision.

Equipment - All machinery, tools, manufactured products, and fabricated items needed to complete the Contract or specified for incorporation into the Work.

Establishment Period - The time specified to assure satisfactory establishment and growth of planted Materials.

Existing Surfacing - Pavements, slabs, curbs, gutters, walks, driveways, and similar constructions of bricks, blocks, Portland cement concrete, bituminous treated materials, and granular surfacing materials on existing Highways.

Extra Work - Work not included in the Contract, but deemed by the Engineer to be necessary to complete the Project.

Final Acceptance - Written confirmation by the Agency that the Project has been completed according to the Contract, with the exception of latent defects and Warranty obligations, if any, and has been accepted.

Final Inspection - The inspection conducted by the Engineer to determine that the Project has been completed according to the Contract.

Fine Aggregate - Crushed Rock, crushed Gravel, or Sand that passes a 1/4 inch sieve, with allowable oversize.

Force Account Work - Items of Extra Work ordered by the Engineer that are to be paid according to Section 00197.

Granular Material - Graded and selected free-draining material composed of particles of Rock, Sand, and Gravel.

Gravel - Particles of Rock, rounded or not, that will pass a 3 inch sieve and be retained on a No. 4 sieve.

Incidental - A term identifying those acts, services, transactions, property, Equipment, labor, Materials, or other items for which the Agency will make no separate or additional payment.

Inspector - The representative of the Engineer authorized to inspect and report on Contract performance.

Leveling - Placing a variable-thickness Course of Materials to restore horizontal and vertical uniformity to existing Pavements, normally continuous throughout the Project.

Lift - The compacted thickness of material placed by Equipment in a single Pass.

Mandatory Source - A material source provided by the Agency from which the Contractor is required to obtain Materials. (see 00160.00(b) and 00160.40)

Materials - Any natural or manmade substance specified for use in the construction of the Project or for incorporation into the Work.

Neat Line - Theoretical lines specified or indicated on the Plans for measurement of quantities.

Nondurable Rock - Rock that has a slake durability index of less than 90% based on a two-cycle slake durability test, as tested by ASTM D 4644, or Rock that is observed to readily degrade by air, water, and mechanical influence.

Notice to Contractors - The public announcement inviting Bids for Work to be performed or Materials to be provided.

Notice to Proceed - Written notice authorizing the Contractor to begin performance of the Work.

On-Site Work - Any Work taking place on the Project Site, including designated staging areas adjacent to the Project Site, except for installation of covered temporary signs according to Section 00225.

Organic Soil - A Soil with sufficient organic content to influence the Soil properties.

Panel - The width of specified Material being placed by Equipment in a single Pass.

Pass - One movement of a piece of Equipment over a particular location.

Patching - Placing a variable-thickness Course of Materials to correct sags, dips, and/or bumps to the existing grade and Cross Section, normally intermittent throughout the Project.

Pavement - Asphalt concrete or Portland cement concrete placed for the use of motor vehicles, bicycles, or pedestrians on Roadways, Shoulders, Multi-Use Paths and parking areas.

Pay Item (Contract Item) - A specific unit of Work for which a price is provided in the Contract.

Payment Bond - The approved security furnished by the Contractor's Surety as a guaranty of the Contractor's performance of its obligation to pay promptly in full all sums due for Materials, Equipment, and labor furnished to complete the Work.

Performance Bond - The approved security furnished by the Contractor's Surety as a guaranty of the Contractor's performance of the Contract.

Plans - Standard and Supplemental Drawings, and approved unstamped and reviewed stamped Working Drawings. (see 00150.10 and 00150.35)

Project - The sum of all Work to be performed under the Contract.

Project Manager - The Engineer's representative who directly supervises the engineering and administration of a Contract.

Project Site - The geographical dimensions of the real property on which the Work is to be performed, including designated contiguous staging areas.

Prospective Source - A Material source provided by the Agency, from which the Contractor has the option of obtaining Materials. (see 00160.00(a) and 00160.40)

Publicly-Owned Equipment - Equipment acquired by a state, county, municipality or political subdivision primarily for use in its own operations.

Public Traffic - Vehicular or pedestrian movement, not associated with the Contract Work, on a public way.

Railroad - Publicly or privately owned rail carriers, including passenger, freight, and commuter rail carriers, their tenants, and licensees. Also, Utilities that jointly own or use such facilities.

Right-of-Way - Land, property, or property interest, usually in a strip, acquired for or devoted to transportation or other public works purposes.

Roadside - The area between the outside edges of the Shoulders and the Right-of-Way boundaries. Unpaved median areas between inside Shoulders of divided Highways and infield areas of interchanges are included.

Roadway - That portion of a Highway improved, designed, or ordinarily used for vehicular travel, exclusive of the berm or Shoulder. If a Highway includes two or more separate Roadways, the term "Roadway" refers to any such Roadway separately, but not to all such Roadways collectively. (see Traveled Way)

Rock - Natural deposit of solid material composed of one or more minerals occurring in large masses or fragments.

Sand - Particles of Rock that will pass a No. 4 sieve and be retained on a No. 200 sieve.

Schedule of Items - The list of Pay Items, their units of measurement, estimated quantities, and prices.

Schedule of Values - The breakdown of the values of the component elements comprising a lump sum Pay Item.

Shoulder - The part of a Roadbed contiguous to the Traveled Way or Roadway, whether paved or unpaved, for accommodating stopped vehicles, for emergency use and for lateral support of Base and surface Courses.

Silt - Soil passing a No. 200 sieve that is nonplastic or exhibits very low plasticity.

Single Course Construction - A wearing Course only, not including patching or leveling Courses or partial width Base Course.

Slope - Vertical distance to horizontal distance, unless otherwise specified.

Soil - Accumulations of particles produced by the disintegration of Rock, which sometimes contains organic matter. Particles may vary in size from Clay to Boulders.

Solicitation Document - Documents which define the procurement of a public improvement Project, including, but not limited to, the Bid Booklet, Agency-provided Plans, Standard Specifications, Supplemental Specifications, Special Provisions, Addenda, and which includes all documents incorporated by reference. May also be called Bid Documents.

Special Provisions - The special directions, provisions, and requirements specific to a Project that supplement or modify the Standard Specifications and the Supplemental Specifications. Permits and orders governing the Project that are issued directly to the Agency by a governmental or regulatory authority are considered to be part of the Special Provisions, to the extent and under the conditions stipulated in the Special Provisions. This includes any amended or supplemental permits or orders issued during the course of performing the Work under a Contract.

Special Services - Force Account Work services that the Contractor and Engineer agree cannot be satisfactorily performed by the Contractor's and Subcontractors' forces, e.g., fabrication and machining work that is most effectively performed away from the Project Site, or rental of operated Equipment as defined in 00180.20©.

Specifications - The Standard Specifications, the Supplemental Specifications, and Special Provisions, together with all provisions of other documents incorporated therein by reference.

Standard Drawings - The Agency-prepared detailed drawings for Work or methods of construction that normally do not change from project to project.

Standard Specifications - "Oregon Standard Specifications for Construction", Volume 1, Part 00100, "General Conditions", and "Oregon Standard Specifications for Construction", Volume 2, Parts 00200 through 03000, "Technical Specifications", current edition, published by the Oregon Department of Transportation.

State - The State of Oregon.

Structures - Bridges, retaining walls, endwalls, cribbing, buildings, culverts, manholes, catch basins, drop inlets, sewers, service pipes, underdrains, foundation drains, and other similar features which may be encountered in the Work.

Subbase - A Course of specified material of specified thickness between the Subgrade and a Base.

Subcontractor - An Entity having a direct contract with the Contractor or another Subcontractor, to perform a portion ofthe Work.

Subgrade - The top surface of completed earthwork on which Subbase, Base, Surfacing, Pavement, or a Course of other Material is to be placed.

Supplemental Drawings - The Agency-prepared detailed drawings for Work or methods of construction that are Project specific, and are denoted by title in the Project title block.

Supplemental Specifications - "Supplemental Oregon Standard Specifications for Construction". Supplemental Specifications are applicable to the particular Contract, and supplement and modify the Standard Specifications with regard to the Work to be done under that Contract.

Supplier - The Entity that furnishes goods to be incorporated into the Work.

Surety - The Entity that issues the bond.

Surfacing - The Course or Courses of material on the Traveled Way, auxiliary lanes, Shoulders, or parking areas for vehicle use.

Ton - One short ton of 2,000 pounds (Ton, ton, Tn, or T).

Topsoil - Soil ready for use in a planting bed.

Traffic Lane - That part of the Traveled Way marked for moving a single line of vehicles.

Traveled Way - That part of the Highway for moving vehicles, exclusive of auxiliary lanes, berms and Shoulders.

Typical Section - That Cross Section established by the Plans which represents in general the lines to which the Contractor shall work in the performance of the Contract.

Unsuitable Material - Frozen material, or material that contains organic matter, muck, humus, peat, sticks, debris, chemicals, toxic matter, or other deleterious materials not normally suitable for use in earthwork.

Utility - A line, facility, or system for producing, transmitting, or distributing communications, power, electricity, heat, gas, oil, water, steam, waste, storm water not connected with highway drainage, or any other similar commodity which directly or indirectly serves the public. The term may also mean the utility company, district, or cooperative owning and operating such facilities, including any wholly-owned or controlled subsidiary.

Warranty Bond - The approved security furnished by the Contractor's, Subcontractor's, or Supplier's Surety as a guaranty of the Contractor's performance of its warranty obligations.

Wetlands - Areas that are inundated or saturated by surface or ground water at a frequency and duration sufficient to support, and that under normal circumstances do support, vegetation typically adapted for life in saturated Soil conditions. Wetlands generally include swamps, marshes, bogs, and similar areas.

Work - The furnishing of all Materials, Equipment, labor, and Incidentals necessary to successfully complete any individual Pay Item or the entire Contract, and the discharge of duties and obligations imposed by the Contract.

Working Drawings - Supplemental Plans, not furnished by the Agency, that the Contractor is required to submit to the Engineer. (see 00150.35)

Section 00120 - Bidding Requirements and Procedures

00120.00 Prequalification of Bidders

All bidders and its subcontractors at time of bid submittal shall hold such licenses as required by State Statutes and Federal and Local Laws and Regulations and have a current, valid license issued by the Oregon Construction Contractors Board as required by ORS 701.055.

00120.01 General Bidding Requirements

Each Bid must be submitted on the prescribed Bid Form and delivered as specified in the Advertisement for Bid. The Bid Form must contain Signatures of personnel authorized to submit Bids, modify Bids, or withdraw Bids.

00120.05 Requests for Solicitation Documents

Copies of the Oregon Standard Specifications may be purchased at the ODOT Procurement Office - Construction, Contractor Plans, 455 Airport Road SE, Building K, Salem, Oregon 97301-5348 (telephone 503-986-6936).

(a) Paper Bids - Bidders must obtain Solicitation Documents from the office of the Engineer or as specified in the Advertisement for Bid. Each request must include both the name of the person ordering or obtaining the Solicitation Documents, and the name of the Entity intending to use them. (The Agency will add the name of the Entity intending to use the Solicitation Documents to the list of Holders of Bidding Plans.) Bidders are cautioned that only Solicitation Documents obtained from the Agency may be used to submit Bids.

(b) Electronic Bids – Electronic Bids are not accepted by RUSA.

00120.10 Bid Schedule

The Bid Schedule may include, but is not limited to:

- Bidder's checklist
- Bid Section
- Description and location of the proposed Project
- Time, date, and location for opening Bids
- Project completion time
- Identification of applicable Supplemental Specifications and Special Provisions
- Bid statement
- Certificate of non-collusion
- Certificate of residency
- Certificate of compliance with Oregon tax laws
- Bid Schedule
- Identification of Bidder(s) and Sureties

- Bid signature page
- Bid Bond form
- First-tier Subcontractor disclosure form

Depending on the Project, other certificates or statements may be bound within the Bid Section. Plans, Specifications, and other documents referred to in the Bid Section will be considered part of the Bid.

00120.15 Examination of Work Site and Solicitation Documents; Consideration of Conditions to be Encountered

Before submitting a Bid, Bidders shall carefully examine the site of the proposed Work, the Bid Booklet, Plans, and Specifications. Bidders shall also contact Utility owners to verify all Utilities' anticipated involvement on the Project Site. Bidders are also encouraged to review any subsurface investigation material referenced in 00120.25 that may be available. Submission of a Bid will constitute confirmation that the Bidder has examined the Project Site and Solicitation Documents, finds the Plans and Specifications to be sufficiently detailed and accurate to enable Bidder to properly perform the Work, and understands the conditions to be encountered in performing the Work and all requirements of the Contract.

The Agency and its employees will not be responsible for loss or unanticipated costs suffered by the Bidder because of the Bidder's failure to become fully informed about all conditions of the Work, or failure to request clarification of Plans and Specifications Bidder believes to be erroneous or incomplete.

Any clarification of Plans and Specifications needed by the Bidder shall be requested in writing through the Engineer. Requests shall be made in sufficient time for the Agency's reply to reach all Bidders before Bid Closing. Oral explanations or interpretations given before receiving Bids for a Project will not be binding. To be binding, interpretation of the Plans and Specifications by the Agency must be made by written Addendum furnished to all Holders of Bidding Plans according to 00120.30. Notification of erroneous or incomplete Plans or Specifications shall also be submitted to the Engineer. Such notification shall also be made in sufficient time for the Agency to make any necessary modifications and issue Addenda to Bidders prior to Bid Closing.

00120.16 Material, Equipment, and Method Substitutions

When the Contract specifies certain Materials, Equipment, and/or methods, the Bidder shall include those Materials, Equipment, and/or methods in the Bid unless the Engineer has issued an Addendum granting approval to substitute. The procedure for requesting approval is as follows:

(a) Written Request - If a Bidder proposes to use Materials, Equipment and/or methods other than those specified, the Bidder shall send a written request to the Engineer, at least seven Calendar Days prior to Bid Opening, including complete descriptive and technical information on the proposed Materials, Equipment and/or methods.

(b) Functional Similarity - Materials and Equipment proposed for substitution shall be similar in design, and equal or better in quality and function to those specified.

(c) Manufacturer's Information - If manufacturers' brochures or information is needed, the Bidder shall submit three copies of each with all pertinent information clearly marked.

(d) Differences - The Bidder shall specifically note all differences between the specified Materials, Equipment and/or methods and the proposed substitutes.

(e) Cost - Where a substitute will result in alteration of the design or space requirements, or any other modifications to the Plans, the Bidder shall include in the substitution request all items of cost for the revised design and construction.

(f) Notification of Holders of Bidding Plans - If the Engineer approves any proposed substitution, such approval, and any modifications necessitated to the design and construction by the substitution, will be acknowledged by Addenda. Unless the Engineer has approved substitutions of Materials, Equipment, and/or methods prior to opening of Bids, the Bidder shall furnish the items specified in the Contract. Substitution after Award is specified in 00180.31(b), 00180.31(c), and 00180.31(d).

00120.30 Changes to Plans, Specifications, or Quantities before Opening of Bids

The Agency reserves the right to issue Addenda making changes or corrections to the Plans, Specifications, or quantities. The Agency will provide Addenda by mail, fax, email or other electronic method only to those on the list of Holders of Bidding Plans. Bids shall incorporate all Addenda. Bids may be rejected if opened and found by the Agency to not be based on all Addenda issued. It will be the bidder's responsibility to assure that the bidder has all issued Addenda for the project. The Agency will not be responsible for any missed addenda sent as listed in this section.

00120.40 Preparation of Bids:

(a) General:

(1) Paper Bids - For Bids submitted by paper, the Bidders shall not alter, in any manner, the paper documents bound within the Bid Section. Bidders shall complete the certifications and statements included in the Bid Section of the Bid Booklet according to the instructions. Signature of the Bidder's authorized representative thereon constitutes the Bidder's confirmation of and agreement to all certifications and statements contained in the paper Bid Booklet. Entries on the paper documents in the Bid Section shall be in ink or typed. Signatures and initials shall be in ink, except for changes submitted by facsimile (FAX) transmission as provided by 00120.60 (in which case FAX signatures shall be considered originals).

The Bidder shall properly complete and bind all the paper documents in the Bid Section, as specified in 00120.10, between the front and back covers of the Bid Booklet, except that the Bid Bond is not required if another permissible type of Bid guaranty is provided. (see 00120.40(e))

(2) Electronic Bids – Electronic Bids are not accepted by RUSA

(b) **Bidding Considerations** - Bidders may refer to the following Subsections for requirements that may affect bidding considerations:

- 00120.80, Preference for Oregon Resident Bidders
- 00130.80, Restrictions on Commencement of Work
- 00150.55, Coordination of Work
- 00150.75, Protection and Maintenance of Work
- 00160.20(a), Buy America
- 00160.20(b), Buy Oregon
- 00180.20, Subcontracting Limitations
- 00180.21, Subcontracting
- 00195.50(a-1), Incidentals
- 00195.00(a), Cost of Insurance and Bonds

(c) Bid Schedule Entries:

(1) Paper Bid Schedule Entries - Using figures, Bidders shall fill in all blank spaces in the paper Bid Schedule. For each item in the paper Bid Schedule, Bidders shall enter the unit price and the product of the unit price multiplied by the quantity given. The unit price shall be greater than zero, shall contain no more than two decimal places to the right of the decimal point, and shall be expressed in U.S. dollars and cents (for example, $150.25 or $0.37). Bidders shall also enter the total amount of the Bid obtained by adding amounts for all items in the paper Bid Schedule. Corrections or changes of item entries shall be in ink, with incorrect entry lined out and correct entry entered and initialed.

(2) Electronic Bid Schedule Entries – Electronic Bid Schedules are not accepted by RUSA

(d) **Bidder's Address and Signature Pages** - Bidders shall include in the Bid the address to which all communications concerning the Bid and Contract should be sent. The Bid must be signed by a duly authorized representative of the Bidder.

(e) **Bid Guaranty** - All Bids shall be accompanied by a Bid guaranty in the amount of 10% of the total amount of the Bid.

(1) Bid Guaranty with Paper Bids - For Bids submitted by paper, the Bid guaranty shall be either a Surety bond, irrevocable letter of credit issued by an insured institution as defined in ORS 706.008 or security in the form of a cashier's check or certified check made payable to the Agency. (see ORS 279C.365(4))

If a Surety bond is submitted, Bidders shall use the Agency's standard Bid Bond form included with the Bid Booklet. Bidders shall submit the bond with original signatures and the Surety's seal affixed. The Bid guaranty shall be submitted by mail, delivery service, or hand delivered to the offices and addresses, and at the times given in the paper Bid Booklet. Alternately, if the Bidder chooses to submit a Bid guaranty in the form of an irrevocable letter of credit issued by an insured institution as defined in ORS 706.008, or a cashier's check or certified check made payable to the Agency (see ORS 279C.365(4)), it shall be submitted by mail, delivery service, or hand delivered to the offices and

addresses, and at the times given in the Bid Booklet. Acceptable Surety companies are limited to those authorized to do business in the State of Oregon.

Forfeiture of Bid guaranties is covered by 00130.60, and return of guaranties is covered by 00130.70.

(f) **Disclosure of First-Tier Subcontractors** - If a Bidder's Bid on a public improvement Project exceeds $100,000, the Bidder shall, within two working hours of the time Bids are due to be submitted, submit to the Agency, on a form provided by the Agency, a disclosure identifying any first-tier Subcontractors that will furnish labor or labor and Materials, and whose contract value is equal to or greater than:

- 5% of the total Project Bid, but at least $15,000; or
- $350,000, regardless of the percentage of the total Project Bid.

For each Subcontractor listed, Bidders shall state:

- The name of the Subcontractor;
- The dollar amount of the subcontract; and
- The category of Work that the Subcontractor would be performing.

If no subcontracts subject to the above disclosure requirements are anticipated, a Bidder shall so indicate by entering "NONE" or by filling in the appropriate check box. For each Subcontractor listed, Bidders shall provide all requested information. An incomplete form will be cause for rejection of the Bid.

The Subcontractor Disclosure Form may be submitted by either:

- By filling out the Subcontractor Disclosure Form included in the Bid Booklet and submitting it together with the Bid at the time and place designated for receipt of Bids;
- By removing it from the paper Bid Booklet, filling it out and submitting it separately to Roseburg Urban Sanitary Authority at the address or FAX number given in the Bid Booklet; or
- By e-mail, using the form and address provided on the Agency's web site named in the paper Bid Booklet.

Subcontractor Disclosure Forms submitted will be considered late if not received by RUSA within two working hours of the time designated for receiving Bids.

E-mail submissions must be fully compatible with Word for Windows©. The Agency is not responsible for partial, failed, illegible or partially legible facsimile (FAX) transmissions or e-mail submittals, and such forms may be rejected as incomplete.

Bids not in compliance with the requirements of this Subsection will be considered non-responsive.

00120.45 Submittal of Bids

Bids may be submitted by mail, parcel delivery service, or hand delivery to the offices and addresses, and at the times given in the Bid Schedule. Submit Bids in a sealed envelope marked with the word "Bid", the name of the Project, and the words "To Be Opened Only by Authorized Personnel" on the outside. If a delivery or courier service is used, the Bidder shall place the sealed envelope containing the Bid inside the delivery or courier service's envelope. Closing time for acceptance of Bids is at the time on the day of the Bid Opening as stated in the Bid Booklet. Bids submitted after the time set for receiving paper Bids will not be opened or considered. The Agency assumes no responsibility for the receipt and return of late paper Bids.

00120.60 Revision or Withdrawal of Bids

Information entered into the Bid Booklet by the Bidder may be changed after the paper Bid has been delivered to RUSA, provided that:

- Changes are prepared according to the instructions identified in the Bid Booklet;
- Changes are received at the same offices, addresses, and times identified in the paper Bid Booklet for submitting Bids;
- The Bid number is included; and
- The changes are submitted in writing or by electronic facsimile (FAX) transmission to the FAX number(s) given in the paper Bid booklet, signed by an individual authorized to sign the Bid. FAX submittals received by the Agency shall constitute an original document.

A Bidder may withdraw its paper Bid after it has been delivered to RUSA, provided that:

- The written withdrawal request is submitted on the Bidder's letterhead, either in person or by FAX, and includes the Bid number;
- The request is signed by an individual who is authorized to sign the Bid, and proof of authorization to sign the Bid accompanies the withdrawal request; and
- The request is received at the same offices, addresses, and times identified in the paper Bid Booklet for submitting Bids.

00120.65 Opening and Comparing Bids

Bids will be opened and the total price for each Bid will be read publicly at the time and place indicated in the Notice to Contractors and the Bid Booklet. Bidders and other interested parties are invited to be present.

Bids for each Project will be compared on the basis of the total amount of each Bid. The total amount of the Bid will be the total sum computed from quantities listed in the Bid Schedule and unit prices entered by the Bidder.

In case of conflict between the unit price and the corresponding extended amount, the unit price shall govern, and the Agency may make arithmetic corrections on extension amounts.

00120.70 Rejection of Nonresponsive Bids

A Bid will be considered irregular and will be rejected if the irregularity is deemed by the Agency to render the Bid non-responsive. Examples of irregularities include without limitation:

- The Bid Section documents provided are not properly used or contain unauthorized alterations.
- The Bid is incomplete or incorrectly completed.
- The Bid contains improper additions, deletions, alternate Bids, or conditions.
- The Bid or Bid modifications are not signed by a person authorized to submit Bids or modify Bids, as required by 00120.01.
- The Bid is submitted on documents not obtained directly from the Agency's Plans office as identified in the Advertisement, or is submitted by a Bidder who has not been identified by the Agency as a Holder of Bidding Plans, as required by 00120.05.
- A member of a joint venture and the joint venture submit Bids for the same Project. Both Bids may be rejected.
- The Bid has entries not typed or in ink, or has signatures or initials not in ink (save for changes received by FAX as provided by 00120.60).
- Each change or correction is not individually initialed.
- White-out tape or white-out liquid is used to correct item entries.
- The price per unit cannot be determined.
- The Bid guaranty is insufficient or improper.
- The original Bid Bond form is not used or is altered.
- The Oregon Construction Contractors Board registration number and expiration date are not shown on the Bid if required in the Solicitation Document.
- A disclosure of first-tier Subcontractors, if required under 00120.40(f), is not received within two working hours of the time Bids are due to be submitted, or the disclosure form is not complete.
- The Bid does not acknowledge all issued Addenda.
- The Bid contains entries that are not greater than zero.
- The Bid contains entries with more than two decimals to the right of the decimal point.
- The Bid entries are not expressed in U.S. dollars and cents.
- The Agency determines that any Pay Item is significantly unbalanced to the potential detriment of the Agency.

00120.80 Reciprocal Preference for Oregon Resident Bidders

Bidders shall complete the certificate of residency provided by the Agency in the Bid Booklet. Failure to properly complete the form will be cause to reject the Bid.

As used in the certificate of residency and this Subsection, "Resident Bidder" means a Bidder who has:

- Paid unemployment taxes or income taxes in the State of Oregon during any of the 12 calendar months immediately preceding submission of the Bid;
- A business address in the State of Oregon; and
- Certified in the Bid that the Bidder qualifies as a Resident Bidder.

"Nonresident Bidder" means a Bidder who is not a Resident Bidder as defined above. In determining the lowest Bid, the Agency will, for the purpose of awarding the Contract, add a percentage increase to the Bid of a Nonresident Bidder equal to the percentage, if any, of the preference given to that Bidder in the state in which the Bidder resides (ORS 279A.120). The percentage preference applied in each state will be published on or before January 1 of each year by the Oregon Department of Administrative Services. The Agency may rely on these percentages without incurring liability to any Bidder (ORS 279A.120). This increase will only be applied to determine the lowest Bid, and will not cause an increase in payment to the Contractor after Award of the Contract.

00120.90 Disqualification of Bidders

The Bid(s) of a disqualified Bidder will be rejected. Any of the following reasons is sufficient to disqualify a Bidder:

- More than one Bid is submitted for the same Work by an Entity under the same or different name(s).
- Evidence of collusion among Bidders. Participants in collusion will be found not responsible, and may be subject to criminal prosecution.
- Any of the grounds for disqualification cited in ORS 279C.440.

A Bidder will be disqualified if the Bidder has:

- Been declared ineligible by the Commissioner of the Bureau of Labor and Industries under ORS 279C.860;

- Not been registered (licensed) by the Oregon Construction Contractors Board (CCB) or been licensed by the State Landscape Contractors Board before submitting a Bid (ORS 279C.365(1)(k), ORS 701.055, and ORS 671.530). The Bidder's registration number and expiration date shall be shown in the Bid form, if requested. Failure to furnish the registration number, if requested, will render the Bid non-responsive and subject to rejection. (not required on Federal-Aid projects); or
- Been determined by the CCB under ORS 701.227 not to be qualified to hold or participate in a public contract for a public improvement.

00120.91 Rejection of Bid on Grounds of Nonresponsibility of Bidder

The Bid of a Bidder who is found to be nonresponsible according to the criteria listed in 00130.10 or ORS 279C.375(3) will be rejected.

Section 00130 - Award and Execution of Contract

00130.00 Consideration of Bids

After opening and reading Bids, the Agency will check them for correct extensions of unit prices and totals. (see 00120.65) The total of extensions, corrected where necessary, will be used by the Agency for Award purposes.

The Agency reserves the right to waive minor informalities and irregularities, and to reject any or all Bids for irregularities under 00120.70 or for good cause after finding that it is in the public interest to do so (ORS 279C.395). An example of good cause for rejection in the public interest is the Agency's determination that any of the unit Bid prices are significantly unbalanced to the Agency's potential detriment. The Agency may correct obvious errors, when the correct information can be determined from the face of the document, if it finds that the best interest of the Agency and the public will be served thereby.

Bids will be considered and a Contract awarded, if at all, within 30 Calendar Days from the date of Bid Opening, unless an extension beyond that time is agreed to by both parties and acknowledged in writing by the Bidder.

00130.10 Award of Contract

After the Bids are opened and a determination is made that a Contract is to be awarded, the Contract will be awarded to the lowest responsible Bidder. For the purposes of this Section, "lowest responsible Bidder" means the lowest Bidder who is not on the list created by the Construction Contractors Board according to ORS 701, and who has:

- Substantially complied with all prescribed public bidding procedures and requirements.
- Available the appropriate financial, Materials, Equipment, facility and personnel resources and expertise, or ability to obtain the resources and expertise, necessary to indicate the capability of the prospective Bidder to meet all contractual responsibilities.
- A satisfactory record of performance. In evaluating a Bidder's record of performance, the Agency may consider, among other things, whether the Bidder completed previous contracts of a similar nature with a satisfactory record of performance. For purposes of evaluating a Bidder's performance on previous contracts of a similar nature, a satisfactory record of performance means that to the extent that the costs associated with an time available to perform a previous contract remained within the Bidder's control, the Bidder stayed within the time and budget allotted for the procurement and otherwise performed the contract in a satisfactory manner.
- A satisfactory record of integrity. In evaluating a Bidder's record of integrity, the Agency may consider, among other things, whether the Bidder has previous criminal convictions for offenses related to obtaining or attempting to obtain a contract or subcontract or in connection with the Bidder' performance of a contract or subcontract.
- Qualified legally to contract with the Agency.
- Supplied all necessary information in connection with the inquiry concerning responsibility. If a prospective Bidder fails to promptly supply information requested

by the Agency concerning responsibility, the Agency shall base the determination of responsibility upon any available information, or may find the prospective Bidder not to be responsible.

- Not been disqualified by the public contracting agency under ORS 279C.440.

If the Bidder is found not to have a satisfactory record of performance or integrity, the Agency will document the record and the reasons for the unsatisfactory finding.

The Agency will provide Notice of Intent to Award in writing and faxed or emailed to contractors on the Holder of Bidding Plans list. The Notice may also be posted on the Agency's web site. The Award will not be final until the later of the following:

- Three working days after the Notice of Intent to Award has been posted as specified in the advertised solicitation or Addendum thereto; or
- The Agency has provided a written response to each timely protest, denying the protest and affirming the Award.

If the Agency accepts a Bid and awards a Contract, the Agency will send the successful Bidder written notice of acceptance and Award.

Notice of Award and Contract booklets ready for execution will be sent within 30 Calendar Days of the opening of Bids or within the number of Calendar Days specified in the Special Provisions or a written mutual agreement.

00130.15 Right to Protest Award

Adversely affected or aggrieved Bidders, limited to the three apparent lowest Bidders and any other Bidder directly in line for Contract Award, may submit to the Roseburg Urban Sanitary Authority Office a written protest of the Agency's intent to Award within three working days following posting of the Notice of Intent to Award. The protest shall specify the grounds upon which it is based.

The Agency is not obligated to consider late protests.

00130.20 Cancellation of Award

Without liability to the Agency, the Agency may for good cause cancel Award at any time before the Contract is executed by all parties to the Contract, as provided by ORS 279C.395 for rejection of Bids, upon finding it is in the public interest to do so.

00130.30 Contract Booklet

The Contract booklet may include but is not limited to:

- Supplemental Specifications, if any
- Special Provisions
- Addenda
- Schedule of Items
- Contract
- Performance Bond
- Payment Bond

- Certification of workers' compensation coverage

00130.40 Contract Bonds, Certificates, and Registrations

Before the Agency will execute the Contract, the successful Bidder shall furnish the following bonds, certificates, and registrations:

(a) Performance and Payment Bonds - When Awarded the Contract, the successful Bidder shall furnish a Performance Bond and a Payment Bond of a Surety authorized to do business in the State of Oregon.

The successful Bidder shall submit the standard bond forms, which are bound in the Contract booklet. Faxed or photocopied bond forms will not be accepted. The amount of each bond shall be equal to the Contract Amount. The Performance Bond and the Payment Bond must be signed by the Surety's authorized Attorney-in-Fact, and the Surety's seal must be affixed to each bond. A power of attorney for the Attorney-in-Fact shall be attached to the bonds in the Contract booklet, which must include bond numbers, and the Surety's original seal must be affixed to the power of attorney. Bonds shall not be canceled without the Agency's consent, nor will the Agency normally release them, prior to Contract completion.

(b) Certificates of Insurance - The successful Bidder shall furnish the Agency certificates of insurance applicable to the Project, according to 00170.70. The insurance coverages shall remain in force throughout the performance of the Contract and shall not be allowed to lapse without prior written approval of the Agency. Bidders may refer to 00170.70 for minimum coverage limits and other requirements.

For specified Contracts, certified copies, and in some instances the original, of insurance policies may be required by the Special Provisions.

(c) Workers' Compensation - To certify compliance with the workers' compensation insurance coverage required by 00170.61(a) and 00170.70(d), the successful Bidder shall submit a "Certification of Workers' Compensation Coverage" from the insurance carrier.

(d) Registration Requirements:

(1) ORS 701.055 and ORS 671.530 require that Bidders be registered with the Oregon Construction Contractors Board or licensed by the State Landscape Contractors Board prior to submission of a Bid on a Project not involving federal funds.

(2) Bidders must be registered with the Corporation Division, Oregon Secretary of State, if bidding as a corporation, limited liability company, joint venture, or limited liability partnership, or if operating under an assumed business name and the legal name of each person carrying on the business is not included in the business name.

(e) Tax Identification Number: The successful Bidder shall furnish the Agency the Bidder's Federal Tax Identification Number.

00130.50 Execution of Contract and Bonds

(a) By the Bidder - The successful Bidder shall deliver the required number of Contract booklets with the properly executed Contract, Performance Bond, Payment Bond, certification of workers' compensation coverage, and the required certificates of insurance, to the RUSA Office within 7 Calendar Days after the date on which the Contract booklets are sent or otherwise conveyed to the Bidder under 00130.10. The Bidder shall return the originals of all documents received from the Agency and named in this Subsection, with original signatures. Certificates of insurance shall also be originals. Certificates of insurance for coverages that are permitted by the Agency under 00170.70(a) to be obtained by appropriate subcontractors shall be delivered by the Contractor to the Agency together with the Contractor's request under 00180.21 for approval of the subcontract with that subcontractor. No copies of these documents will be accepted by the Agency.

Proper execution requires that:

- If the Contractor is a partnership, limited liability partnership, joint venture, or limited liability company, an authorized representative of each Entity comprising it shall sign the Contract, Performance Bond, and Payment Bond, and an authorization to sign shall be attached.
- If the Contractor is a corporation, the President and the Secretary of that corporation shall sign the Contract, Performance Bond, and Payment Bond. However, if other corporate officers are authorized to execute contracts and bonds, the successful Bidder shall furnish with those documents a certified, true and correct copy of the corporate bylaws or minutes stating that authority. If only one officer is signing, then the bylaws or minutes must include the authority to sign without the signature of others. The successful Bidder shall also include the title(s) or corporate office(s) held by the signer(s).

(b) By the Agency - Within ten Calendar Days after the Agency has received and verified the properly executed documents specified in 00130.50(a), the Agency will execute the Contract. The Agency will then send a fully-executed original Contract booklet to the successful Bidder, who then officially becomes the Contractor.

00130.60 Failure to Execute Contract and Bonds

Failure of the successful Bidder to execute the Contract and provide the required certificates, certifications, and bonds may be cause for cancellation of the Award, and may be cause for forfeiture of the Bid guaranty under ORS 279C.385. Award may then be made to the next lowest responsible Bidder, the Project may be re-advertised, or the Work may be performed otherwise as the Agency decides. The forfeited Bid guaranty will become the Agency's property, not as a penalty but as liquidation of damages resulting from the Bidder's failure to execute the Contract and provide the certificates, certifications, and bonds as required by these Specifications.

00130.70 Release of Bid Guaranties

Bid guaranties will be released and checks returned seven Calendar Days after Bids are opened, except for those of the three apparent lowest Bidders on each Project. The guaranties of the three apparent lowest Bidders will be released and checks returned to unsuccessful Bidders within seven days of the Agency's execution of the Contract.

00130.80 Project Site Restriction

Until the Agency sends the Contractor written Notice to Proceed with the Work, and the Contractor has filed the public works bonds required in 00170.20, the Contractor shall not go onto the Project Site on which the Work is to be done, nor move Materials, Equipment, or workers onto that Project Site.

The Contractor will not automatically be entitled to extra compensation because the commencement of Work is delayed by failure of the Agency to send the Contract for execution. However, if more than 30 Calendar Days elapse between the date the Bid is opened and the date the Agency sends the Contract to be executed, the Agency will consider granting an adjustment of time for completion of the Work to offset any actual delay to Contract completion resulting directly from delay in commencement.

00130.90 Notice to Proceed

Notice to Proceed will be issued within ten Calendar Days after the Contract is executed by the Agency.

Should the Agency fail to issue the Notice to Proceed within ten Calendar Days of Contract execution, the Contractor may apply for an adjustment of Contract Time according to 00180.80(c). The Engineer will record the date the performance of the Contract has begun.

Section 00140 - Scope of Work

00140.00 Purpose of Contract

The purpose of the Contract is to set forth the rights and obligations of the parties and the terms and conditions governing completion of the Work. The Contractor's obligations shall include without limitation the following:

- The Contractor shall furnish all Materials, Equipment, labor, transportation, and Incidentals required to complete the Work according to Plans, Specifications, and terms of the Contract.
- The Contractor shall perform the Work according to the Typical Sections, dimensions, and other details shown on the Plans, as modified by written order, or as directed by the Engineer.
- The Contractor shall perform all Work determined by the Engineer to be necessary to complete the Project.
- The Contractor shall contact the Engineer for any necessary clarification or interpretation of the Contract.

00140.10 Typical Sections

The Typical Sections are intended to apply in general. At other locations where the Typical Section is not appropriate, the Contractor shall perform construction to the identified alignment as directed by the Engineer.

00140.30 Agency-Required Changes in the Work

Changes to the Plans or details of construction are inherent in the nature of construction and may be necessary or desirable during the course of Project construction.

Without impairing the Contract, the Agency reserves the right to require changes it deems necessary or desirable within the scope, which in the Specifications means general scope, of the Project. These changes may modify, without limitation:

- Specifications and design
- Method or manner of performance of Work
- Project Limits

or may result in:

- Increases and decreases in quantities

. Additional Work

- Elimination of any Contract item of Work
- Acceleration or delay in performance of Work

Upon receipt of a Change Order, the Contractor shall perform the Work as modified by the Change Order. If the Change Order increases the Contract Amount, the Contractor shall notify its Surety of the increase and shall provide the Agency with a copy of any resulting modification to bond documents.

The Contractor's performance of Work according to Change Orders shall neither invalidate the Contract nor release the Surety. Payment for changes in the Work will be made according to 00195.20. Contract Time adjustments, if any, will be made according to 00180.80.

00140.50 Environmental Pollution Changes

ORS 279C.525 will apply to any increases in the scope of the Work required as a result of environmental or natural resources laws enacted or amended after the submission of Bids for the Contract. The Contractor shall comply with the applicable notice and other requirements of ORS 279C.525. The applicable rights and remedies of that statute will also apply.

In addition to ORS 279C.525, the Agency has compiled a list at 00170.01 of those federal, State, and local agencies, of which the Agency has knowledge, that have enacted ordinances, rules, or regulations dealing with the prevention of environmental pollution and the preservation of natural resources that may affect the performance of Agency contracts.

00140.60 Extra Work

If directed by the Engineer's written order, the Contractor shall perform work not included in the Contract. The Contractor shall perform this work according to:

- Standard Specifications
- Supplemental Specifications, if any
- Other Plans and Specifications issued by the Engineer

Payment for Extra Work will be made according to Section 00196. Contract Time adjustments, if any, will be made according to 00180.80.

00140.65 Disputed Work

The Contractor may dispute any part of a Change Order, written order, or an oral order from the Engineer by the procedures specified in Section 00199.

00140.70 Cost Reduction Proposals

The Contractor may submit written proposals to the Engineer that modify Plans, Specifications, or other Contract Documents for the sole purpose of reducing the total cost of construction. Unless otherwise agreed to in writing by the Agency, a proposal that is solely or primarily a proposal to reduce estimated quantities or delete Work, as determined by the Engineer, is not eligible for consideration as a cost reduction proposal and will instead be addressed under 00140.30, whether proposed or suggested by the Agency or the Contractor.

(a) Proposal Requirements - The Agency will not adopt a cost reduction proposal that impairs essential functions or characteristics of the Project including but not limited to service life, economy of operation, ease of maintenance, designed appearance, or design and safety standards. To conserve time and funds, the Contractor may first submit a written request for a feasibility review by the Engineer. The request should contain a description of the proposal together with a rough estimate of anticipated

dollar and time savings. The Engineer will, within a reasonable time, advise the Contractor in writing whether or not the proposal would be considered by the Agency, should the Contractor elect to submit a detailed cost reduction proposal.

A detailed cost reduction proposal shall include without limitation the following information:

- A description of existing Contract requirements for performing the Work and the proposed change;
- The Contract items of Work affected by the proposed change, including any quantity variation caused by the proposed change;
- Pay Items affected by the proposed change including any quantity variations;
- A detailed cost estimate for performing the Work under the existing Contract and under the proposed change. Cost estimates shall be based on a force account payment basis. Costs of re-design, which are incurred after the Agency has accepted the proposal, will be included in the cost of proposed work; and
- A date by which the Engineer must accept the proposal in order to accept the proposed change without impacting the Contract Time or cost reduction amount.

(b) Continuing to Perform Work - The Contractor shall continue to perform the Work according to Contract requirements until the Engineer issues a Change Order incorporating the cost reduction proposal. If the Engineer fails to issue a Change Order by the date specified in the proposal, the proposal shall be deemed rejected.

(c) Consideration of Proposal - The Engineer is not obligated to consider any cost reduction proposal. The Agency will not be liable to the Contractor for failure to accept or act upon any cost reduction proposal submitted.

The Engineer will determine in its sole discretion whether to accept a cost reduction proposal as well as the estimated net savings in construction costs from the adoption of all or any part of the proposal. In determining the estimated net savings, the Engineer may disregard the Schedule of Items. The Engineer will establish prices that represent a fair measure of the value of Work to be performed or to be deleted as a result of the cost reduction proposal.

(d) Sharing Investigation Costs - As a condition for considering a Contractor's cost reduction proposal, the Agency reserves the right to require the Contractor to share in the Agency's costs of investigating the proposal. If the Agency exercises this right, the Contractor shall provide written acceptance of the condition to the Engineer. Such acceptance will authorize the Agency to deduct its share of investigation costs from payments due or that may become due to the Contractor under the Contract.

(e) Acceptance of Proposal Requirements - If the Contractor's cost reduction proposal is accepted in whole or in part, acceptance will be made by a Change Order that will include without limitation the following:

- Statement that the Change Order is made according to 00140.70;
- Revised Plans and Specifications that reflect all modifications necessary to implement the approved cost reduction measures;

- Any conditions upon which the Agency's approval is subject;
- Estimated net savings in construction costs attributable to the approved cost reduction measures; and
- A payment provision according to which the Contractor will be paid 50% of the estimated net savings amount as full and adequate consideration for performance of the Work of the Change Order.

The Contractor's cost of preparing the cost reduction proposal and the Agency's costs of investigating the proposal, including any portion paid by the Contractor, will be excluded from determination of the estimated net savings in construction costs. Costs of re-design, which are incurred after the Agency has accepted the proposal, will be included in the cost of the Work attributable to cost reduction measures.

If the Agency accepts the cost reduction proposal, the Change Order that authorizes the cost reduction measures will also address any Contract Time adjustment.

(f) Right to General Use - Once submitted, the cost reduction proposal becomes the property of the Agency. The Agency reserves the right to adopt the cost reduction proposal for general use without additional compensation to the Contractor when it determines that a proposal is suitable for application to other contracts.

00140.80 Use of Publicly Owned Equipment

The Contractor is prohibited from using publicly-owned Equipment except in the case of emergency. In an emergency, the Contractor may rent publicly-owned Equipment provided that:

- The Engineer provides written approval that states that such rental is in the public interest; and
- Rental does not increase the Project cost.

00140.90 Final Trimming and Cleanup

Before Final Inspection as described in 00150.90, the Contractor shall neatly trim and finish the Project and remove all remaining unincorporated Materials and debris. Final trimming and cleanup shall include without limitation the following:

- Where the Work has impacted existing facilities or devices, the Contractor shall restore or replace those facilities to their pre-existing condition.
- The Contractor shall clean all drainage facilities and sanitary sewers of excess Materials or debris resulting from the Work.
- The Contractor shall clean up and leave in a neat, orderly condition, Rights-of-Way, Materials sites, and other property occupied in connection with performance of the Work.
- The Contractor shall remove temporary buildings, construction plants, forms, falsework and scaffolding, surplus and discarded Materials, and rubbish.
- The Contractor shall dispose of Materials and debris including without limitation forms, falsework, scaffolding, and rubbish resulting from clearing, grubbing,

trimming, clean-up, removal, and other Work. These Materials and debris become the property of the Contractor. The Contractor shall dispose of these Materials and debris immediately.

Unless the Contract specifically provides for payment for this item, the Agency will make no separate or additional payment for final trimming and cleanup.

Section 00150 - Control of Work

00150.00 Authority of the Engineer

The Engineer has full authority over the Work and its suspension. (see Section 00180) The Contractor shall perform all Work to the complete satisfaction of the Engineer. The Engineer's determination shall be final on all matters, including but not limited to the following:

- Quality and acceptability of Materials and workmanship
- Timely and proper prosecution of the Work
- Interpretation of Plans and Specifications
- Payments due under the Contract

The Engineer's decision is final and, except as provided in 00180.80 for adjustments of Contract Time and Section 00199 for claims for additional compensation, may be challenged only through litigation. Work performed under the Contract will not be considered complete until it has passed Final Inspection by the Engineer and has been accepted by the Agency.

Interim approvals issued by the Engineer, including but not limited to final acceptance, will not discharge the Contractor from responsibility for errors in prosecution of the Work, for improper fabrication, for failure to comply with Contract requirements, or for other deficiencies, the nature of which are within the Contractor's control.

00150.01 Project Manager's Authority and Duties

The Engineer may designate a Project Manager as its representative on the Project with authority to enforce the provisions of the Contract. When the Engineer has designated a Project Manager, the Contractor should direct all requests for clarification or interpretation of the Contract, in writing, to the Project Manager. The Project Manager will respond within a reasonable time. Contract clarification or interpretation obtained from persons other than the Project Manager will not be binding on the Agency.

The Project Manager shall have the authority to appoint Inspectors and other personnel as required to assist in the administration of the Contract.

00150.02 Inspector's Authority and Duties

To the extent delegated under 00150.01, Inspectors are authorized to represent the Engineer and Project Manager to perform the following:

- Inspect Work performed and Materials furnished, including without limitation, the preparation, fabrication, or manufacture of Materials to be used;
- Orally reject defective Materials and to confirm such rejection in writing;

- By oral order, temporarily suspend the Work for improper prosecution pending the Engineer's decision; and .Exercise additional delegated authority.

Inspectors are not authorized to:

- Accept Work or Materials.
- Alter or waive provisions of the Contract.
- Give instructions or advice inconsistent with the Contract Documents.

00150.10 Coordination of Specifications and Plans

The Contract Documents, including but not limited to Contract Change Orders, the Special Provisions, the Plans, Supplemental Specifications, and the Standard Specifications are intended to collectively describe all of the items of Work necessary to complete the Project.

(a) Order of Precedence - The Engineer will resolve any discrepancies between these documents in the following order of precedence:

- Contract Change Orders;
- Special Provisions;
- Agency-prepared drawings specifically applicable to the Project and bearing the Project title;
- Reviewed and accepted, stamped Working Drawings;
- Standard Drawings;
- Approved Unstamped Working Drawings;
- Supplemental Specifications;
- Standard Specifications; and
- All other contract documents not listed above.

Notes on a drawing shall take precedence over drawing details. Dimensions shown on the drawings, or that can be computed, shall take precedence over scaled dimensions.

(b) Immaterial Discrepancies - The Specifications and Plans specify details for the construction and completion of the Work. If Specifications or Plans describe portions of the Work in sufficient detail but are silent in some minor respect, the Contractor may proceed utilizing the current best industry practices.

(c) Material Discrepancies - If the Contractor identifies a discrepancy, error, or omission in the Specifications or Plans that cannot be resolved by the approach specified in (b) above, the Contractor shall immediately request clarification from the Engineer.

00150.20 Inspection

(a) Inspection by the Engineer - The Engineer may test Materials furnished and inspect Work performed by the Contractor to ensure Contract compliance. If the Contractor performs Work without the Engineer's inspection or uses Materials that the Engineer has not approved, the Engineer may order affected portions of the Work removed at the Contractor's expense. The foregoing sentence shall not apply if the Engineer fails

to inspect the Work within a specific period of time required in the Contract, or in the absence of a specific period of time, within a reasonable period of time after receiving the Contractor's timely written request for inspection or testing.

At the Engineer's direction, any time before the Work is accepted, the Contractor shall uncover portions of the completed Work for inspection. After inspection, the Contractor shall restore these portions of Work to the standard required by the Contract. If the Engineer rejects Work due to Materials or workmanship, or if the Contractor performed such Work without providing sufficient advance request for inspection to the Engineer, the Contractor shall bear all costs of uncovering and restoring the Work. If the Engineer accepts the uncovered Work, and the Contractor performed the Work only after providing the Engineer with sufficient advance notice, the costs of uncovering and restoring the Work will be paid for by the Agency as Extra Work.

(b) Inspection Facilities - The Contractor shall furnish walkways, railings, ladders, shoring, tunnels, platforms, and other facilities necessary to permit the Engineer to have safe access to the Work to be inspected. The Contractor shall require producers and fabricators to provide safe inspection access as requested by the Engineer.

(c) Sampling - The Contractor shall furnish the Engineer with samples of Materials that the Engineer will test. All of the Contractor's costs related to this required sampling are Incidental.

(d) Inspection by Third Parties - Where third parties have the right to inspect the Work, the Contractor shall coordinate with the Engineer and shall provide safe inspection access.

(e) Contractor's Duty to Make Corrections - The Contractor shall perform all Work according to the Specifications and Plans. The Contractor shall correct Work that does not comply with the Specifications and Plans at its own expense. Inspection of the Work by the Engineer does not relieve the Contractor of responsibility for improper prosecution of the Work.

00150.25 Acceptability of Materials and Work

The Contractor shall furnish Materials and shall perform Work in Close Conformance to the Plans and Specifications. If the Engineer determines that the Materials furnished or the Work performed are not in Close Conformance with the Plans and Specifications, the Engineer may:

- Reject the Materials or Work and order the Contractor, at the Contractor's expense, to remove, replace, or otherwise correct any non-conformity; or
- Accept the Materials or Work as suitable for the intended purpose, adjust the amount paid for applicable Pay Items to account for diminished cost to the Contractor or diminished value to the Agency, document the adjustment, and provide written documentation to the Contractor regarding the basis of the adjustment.

The Engineer's decisions concerning acceptability of Materials or Work will be final.

00150.30 Delivery of Notices

Written notices to the Contractor by the Engineer or the Agency will be delivered:

- In person;
- By U.S. Postal Service first class mail or priority mail (which at the sender's option may include certified or registered mail return receipt requested), to the current office address as shown in the records of the Agency; or
- By overnight delivery service of a private industry courier, to the current office address as shown in the records of the Agency.

Notices shall be considered as having been received by the Contractor:

- At the time of actual receipt when delivered in person;
- At the time of actual receipt or seven Calendar Days after the postmarked date when deposited for delivery by first class or priority mail, whichever is earlier; or
- At the time of actual receipt or three Calendar Days after deposit with a private industry courier for overnight delivery service, whichever is earlier.

Written notices to the Engineer or the Agency by the Contractor shall be delivered to the Agency address shown in the Special provisions, unless a different address is agreed to by the Engineer, and shall be delivered:

- In person;
- By U.S. Postal Service first class mail or priority mail (which at the sender's option may include certified or registered mail return receipt requested); or
- By overnight delivery service of a private industry courier.

Notices will be considered as having been received by the Agency:

- At the time of actual receipt when delivered in person;
- At the time of actual receipt or seven Calendar Days after the postmarked date when deposited for delivery by first class or priority mail, whichever is earlier; or
- At the time of actual receipt or three Calendar Days after deposit with a private industry courier for overnight delivery service, whichever is earlier.

00150.35 Plans and Working Drawings

(a) Plans - The Plans will show the area of work, details and typical sections of the work.

(b) Working Drawings - The Contractor shall supplement the Agency-prepared Plans with stamped or unstamped Working Drawings that show all information necessary to complete the Work. The applicable Section or Subsection of the Standard Specifications will indicate the supplemental information required and whether the drawings are to be stamped or unstamped. Stamped and unstamped Working Drawings are defined as follows:

(1) Stamped Working Drawings - Working Drawings, calculations, and other data which are prepared by or under the direction of a Professional Engineer licensed in the State of Oregon, and which bear the engineer's signature, seal, and expiration date.

(2) Unstamped Working Drawings - Working Drawings, calculations, and other data that do not bear an engineering seal.

(d) Number and Size of Drawings - The Contractor shall submit four copies of Working Drawings for steel Structures and three copies of Working Drawings for other Structures to the Engineer. Submitted copies shall be clear and readable.

Drawing dimensions shall be 8 1/2 inches by 11 inches, 11 inches by 17 inches, or 22 inches by 36 inches in size. One copy of the submitted Working Drawings will be returned to the Contractor after processing. The Contractor shall submit such additional number of copies to the Engineer for processing that the Contractor would like to have returned.

(d) Processing Working Drawings - The Engineer will process Working Drawings and include all comments on them as follows:

(1) Stamped Working Drawings - Stamped Working Drawings will be designated as "reviewed" or "reviewed with comments" by the Engineer.

(2) Unstamped Working Drawings - Unstamped Working Drawings will be designated on the face of the Drawing, as "approved", "approved as noted", "returned for correction" by the Engineer.

The Contractor shall not fabricate or construct any structural components until the stamped or unstamped Working Drawings are returned by the Engineer with written notation of approval or review, as applicable, of the Working Drawings.

The Engineer's processing of the Working Drawings does not amend any contractual obligations of the parties.

The Engineer will process and return Working Drawings within 21 Calendar Days (65 Calendar Days if Railroad approval is required) after receipt by the Engineer. If the Engineer fails to return such drawings within this period of time, the Engineer will consider granting a Contract Time extension according to 00180.80.

00150.37 Equipment Lists and Other Submittals

The Contractor shall submit Equipment lists, and other required submittals for approval by the Engineer. The Engineer will respond to requests for approval within time frames specified in each Section of the Specifications that requires such approval.

00150.40 Cooperation and Superintendence by the Contractor

The Contractor is responsible for full management of all aspects of the Work, including superintendence of all Work by Subcontractors, Suppliers, and other providers. The Contractor shall appoint a single Superintendent and may also appoint alternate Superintendents as necessary to control the Work. The form of appointment of the alternate shall state, in writing, the alternate's name, duration of appointment in the absence of the Superintendent, and scope of authority. The Contractor shall:

- Provide for the cooperation and superintendence on the Project by:
- Furnishing the Engineer all data necessary to determine the actual cost of all or any part of the Work, added Work, or changed Work.

- Allowing the Engineer reasonable access to the Contractor's books and records at all times. To the extent permitted by public records laws, the Engineer will make reasonable efforts to honor the Contractor's request for protection of confidential information.
- Keeping one complete set of Contract Documents on the Project Site at all times, available for use by all the Contractor's own organization, and by the Engineer if necessary.
- Appoint a single Superintendent and any alternate Superintendent who shall meet the following qualifications:
- Appointees shall be competent to manage all aspects of the Work.
- Appointees shall be from the Contractor's own organization.
- Appointees shall have performed similar duties on at least one previous project of the size, scope and complexity as the current Contract.
- Appointees shall be experienced in the types of Work being performed.
- Appointees shall be capable of reading and thoroughly understanding the Plans and Specifications.

The appointed single Superintendent, or any alternate Superintendent shall:

- Be present for all On-Site Work, regardless of the amount to be performed by the Contractor, Subcontractors, Suppliers, or other providers, unless the Engineer provides prior approval of the Superintendent's or alternate Superintendent's absence.
- Be equipped with a two way radio or cell phone capable of communicating throughout the project during all the hours of Work on the Project Site and be available for communication with the Engineer.
- Have full authority and responsibility to promptly execute orders or directions of the Engineer.
- Have full authority and responsibility to promptly supply the Materials, Equipment, labor, and Incidentals required for performance of the Work.
- Coordinate and control all Work performed under the Contract, including without limitation the Work performed by Subcontractors, Suppliers, and Owner Operators.
- Diligently pursue progress of the Work according to the schedule requirements of Section 00180.
- Cooperate in good faith with the Engineer, Inspectors, and other contractors in performance of the Work.
- Provide all assistance reasonably required by the Engineer to obtain information regarding the nature, quantity, and quality of any part of the Work.
- Provide access, facilities and assistance to the Engineer in establishing such lines, grades and points as the Engineer requires.
- Carefully protect and preserve the Engineer's marks and stakes.

Any Superintendent or alternate Superintendent who repeatedly fails to follow the Engineer's written or oral orders, directions, instructions, or determinations, shall be subject to removal from the project.

If the Contractor fails or neglects to provide a Superintendent, or an alternate Superintendent, and no prior approval has been granted, the Engineer has the authority to

suspend the Work according to 00180.70. Any continued Work by the Contractor, Subcontractors, Suppliers, or other providers may be subject to rejection and removal. The Contractor's repeated failure or neglect to provide the superintendence required by these provisions constitutes a material breach of the Contract, and the Engineer may impose any remedies available under the Contract, including but not limited to Contract termination.

00150.55 Cooperation with Other Contractors

The Agency reserves the right to perform other work on or near the Project Site, including without limitation any Materials site, with forces other than those of the Contractor.

If such work takes place within or next to the Project Site, the Contractor shall have the following obligations:

- The Contractor shall coordinate Work with other contractors or forces.
- The Contractor shall cooperate in good faith with all other contractors or forces.
- The Contractor shall perform the Work specified in the Contract in a way that will minimize interference and delay for all forces involved.
- The Contractor shall place and dispose of the Materials being used so as not to interfere with the operations of other forces.
- The Contractor shall join the Work with that of other forces in a manner acceptable to the Engineer or the Agency, and shall perform it in the accepted sequence with the work of the other force. The Engineer will resolve any disagreements under this Subsection that may arise among the Contractor and other work forces, or between the Contractor and the Agency. The Engineer's decision in these matters is final, as provided in 00150.00.

When the schedules for Work of the Contractor and the work of other forces overlap, each contractor involved shall submit a current, realistic progress schedule to the Engineer. Before the Engineer accepts the schedule, each party shall have the opportunity to review all schedules. After this review and any necessary consultations, the Engineer will determine acceptable schedules.

The Contractor waives any right it may have to make claims against the Agency for any damages or claims that may arise because of inconvenience, delay, or loss due solely to the presence of other contractors working on or near the Project Site.

If the Contract gives notice of work to be performed by other forces that may affect the Contractor's Work under the Contract, the Contractor shall include any costs associated with coordination of the Work in the appropriate Pay Item or as a portion of a Pay Item. In an emergency, the contractor most immediately able to respond may repair a facility or Utility of another contractor in order to prevent further damage to the facility, Utility, or other Structure as a result of the emergency.

00150.70 Detrimental Operation

The Contractor shall avoid operations whose methods, conditions, or timing may injure people or damage property or the Work. Damage may include without limitation, staining surfaces with foreign materials. (also see 00150.60, 00150.75, and Section 00170)

If any such damage occurs, the Engineer will determine if it is to be corrected by repair, replacement, or compensatory payment by the Contractor. If compensatory payment is required, the Engineer will determine the amount. Compensatory payment may be deducted from monies due or to become due to the Contractor under the Contract.

00150.80 Removal of Unacceptable and Unauthorized Work

The Contractor shall correct or remove unacceptable Work, as directed by the Engineer in writing. The Contractor shall replace such work with Work and Materials conforming to the requirements of the Contract. For the purposes of this Subsection, "unauthorized work" shall include without limitation the following:

- Work that is contrary to the Engineer's instructions; and
- Work that is conducted without the Engineer's written authorization.

The Agency will not pay the Contractor for unauthorized or unacceptable work. The Engineer may issue a written order for the correction or removal of such work at the Contractor's expense. If, when ordered by the Engineer, the Contractor fails to correct or remove unacceptable or unauthorized work, the Engineer may have the correction, or removal and replacement, done by others and deduct the entire cost from monies due or to become due the Contractor under the Contract.

00150.90 Final Inspection:

(a) On-site Construction Work - The Engineer will inspect the Project at a time close to the completion of On-Site Work to ensure the Contractor's compliance with the Plans and Specifications. When all On-Site Work on the Project is completed, including but not limited to Change Order Work and Extra Work, the Engineer will issue a Notice of Substantial Completion as specified in 00180.50(g). Within 5 Calendar Days after the Engineer receives the Contractor's written notification that all punch list items, final trimming and cleanup according to 00140.90 have been completed, the Engineer will review the Project and notify the Contractor that all Work is complete, or will give the Contractor written instruction regarding incomplete or unsatisfactory Work.

(b) All Contract Work - The Engineer will issue the Final Completion Notice when the Contractor has satisfactorily accomplished all of the following:

- The Contractor has completed all On-Site Work required under the Contract, including the punch list items from (a) above;
- The Contractor has removed all Equipment; and
- The Contractor has submitted all required certifications, bills, forms, warranties and other documents.

00150.95 Final Acceptance

After the Engineer completes Final Inspection of all Work and sends Final Completion Notice to the Contractor, the Agency will acknowledge Final Acceptance. The Agency will notify the Contractor in writing of the date of Final Acceptance within seven Calendar Days after Final Acceptance, or as soon thereafter as is practicable.

00150.96 Maintenance Warranties and Guarantees

Prior to the Final Completion Notice, the Contractor shall transfer to the Agency all unexpired manufacturers' warranties and guarantees for Materials and Equipment installed on the Project. Such warranties and guarantees shall recite that they are enforceable by the Agency.

00150.97 Responsibility for Materials and Workmanship

(a) The Contractor shall perform the Work according to the terms, conditions, requirements, Plans, and Specifications set out in the Contract.

(b) Whether before or after the Agency's acceptance of the Work, the Contractor shall be responsible for:

- Correcting or repairing any defects in, or damage to, the Work which results from the use of improper or defective materials or workmanship; or
- Replacing, in its entirety, the Work affected by the use of improper or defective materials or workmanship to the extent provided by law; and
- Correcting or repairing any Work, Materials, Structures, Existing Surfacings, Pavement, Utilities, or sites, including without limitation Wetlands, damaged or disturbed in that correction, repair, or replacement. (see 00170.80 to 00170.85)

Section 00160 - Source of Materials

00160.00 Definitions

The following definitions apply to Section 00160:

(a) Prospective Source - Agency-furnished Materials source, use of which by the Contractor is optional. The Agency makes no guarantee or representation, by implication or otherwise, of the land use status, quantity, quality, or acceptability of Materials available from it, except as may be stated in the Special Provisions.

(b) Mandatory Source - Agency-furnished Materials source, use of which by the Contractor is required.

00160.01 Notification of Source of Supply and Materials

(a) All Materials - The Contractor shall notify the Engineer in writing of all proposed Materials sources of supply, including without limitation any steel or other fabricators within the following time frames:

. At least 10 Calendar Days before using or fabricating Materials, if source is within the State.

(b) Prospective Source Materials - When given an option to use Prospective Sources of Materials to be incorporated into the Work, the Contractor shall notify the Engineer in writing of the option selected within 10 Calendar Days from date of Notice to Proceed. Otherwise, such Materials sources may become unavailable.

(c) Approval Required - Before allowing production or delivery of Materials to begin from any source, the Contractor must obtain the Engineer's approval. Approval to use any source does not imply that Materials from that source will be accepted. If approved sources do not provide Materials that meet Specifications, the Materials will be rejected. The Contractor will then be responsible for locating other sources and obtaining the Engineer's approval.

00160.20 Preferences for Materials

(a) Buy Oregon - According to ORS 279A.120, the Contractor shall give preference to goods or services produced in Oregon if price, fitness, availability, and quality are equal.

(b) Recycled Materials - According to ORS 279A.010, ORS 279A.125, ORS 279A.145, ORS 279A.150, and ORS 279A.155, and subject to the approval of the Engineer, the Contractor shall use recycled products to the maximum extent economically feasible.

00160.30 Agency-Furnished Materials

Unless otherwise specified in the Special Provisions, Materials listed as Agency-furnished will be available to the Contractor free of charge. The Contractor shall be responsible for all Materials furnished by the Agency and shall pay all demurrage and storage charges. The Contractor shall replace at its expense Agency-furnished Materials lost or damaged due to any cause.

00160.60 Contractor-Furnished Materials and Sources

(a) General - The Contractor shall furnish, at its own expense, all products and Materials required for the Project from sources of its own choosing, unless such sources have been specified in the Special Provisions or Plans as Prospective or Mandatory Sources.

Section 00165 – Quality of Material

00165.00 General

The Contractor shall incorporate into the Work only Materials conforming to the Specifications and approved by the Engineer. The Contractor shall incorporate into the Work only manufactured products made of new materials unless otherwise specified in the Contract. The Agency may require additional testing or retesting to determine whether the Materials or manufactured products meet Specifications.

Materials or manufactured products not meeting the Specifications at the time they are to be used are unacceptable and must be removed immediately from the Project Site, unless otherwise directed by the Engineer.

00165.01 Rejected Materials

The Engineer may reject any Materials that appear to be defective (00150.25) or that contain asbestos. The Contractor shall not incorporate any rejected Materials into the Work. Rejected Materials whose defects have been corrected may not be incorporated into the Work until the Engineer has approved their use. The Engineer may order the removal and replacement by the Contractor, at Contractor's expense, of any defective Materials. (refer also to 00150.20).

00165.02 Materials Conformance and Quality Compliance Documents

For purposes of this Section, "Materials Conformance Documents" means the Contractor's quality-control, the Agency's verification, and the independent assurance test results, and the identity of the testing facility. "Quality Compliance Documents" means those documents specified in ODOT’s Nonfield-Tested Materials Acceptance Guide, unless otherwise specified in the Contract.

00165.03 Testing by Agency

When testing Materials, the Agency will conduct the tests in laboratories designated by the Engineer, even though certain AASHTO, ASTM, and other Materials specifications may require testing at the place of manufacture. Results of the Agency’s tests will be made available to the Contractor.

00165.04 Costs of Testing

When the Contract requires that the Agency performs the testing, the testing will be at the Agency's expense.

Section 00170 - Legal Relations and Responsibilities

00170.00 General

The Contractor shall comply with all laws, ordinances, codes, regulations and rules, (collectively referred to as "Laws" in this Section), that relate to the Work or to those engaged in the Work. Where the provisions of the Contract are inconsistent or in conflict, the Contractor shall comply with the more stringent standard. The Contractor shall indemnify, defend, and hold harmless the Agency and its representatives from liability arising from or related to the violation of Laws by those engaged in any phase of the Work. This provision does not apply to Work performed by Agency employees.

Provisions and Requirements

00170.01 Other Agencies Affecting Agency Contracts

Representatives of regulatory bodies or units of government whose Laws may apply to the Work shall have access to the Work according to 00150.20(d). These may include but are not limited to those in the following (a), (b), (c), and (d).

(a) Federal Agencies:

Agriculture, Department of
Forest Service
Natural Resource Conservation Service
Army, Department of the
Corps of Engineers
Commerce, Department of
National Marine Fisheries Service
Defense, Department of
Energy, Department of
Environmental Protection Agency (EPA)
Federal Energy Regulatory Commission
Geology Survey
Health and Human Services, Department of
Homeland Security, Department of
Housing and Urban Development, Department of
Interior, Department of
Heritage, Conservation, and Recreation Service
Bureau of Indian Affairs
Bureau of Land Management
Geological Survey
U.S. Fish and Wildlife Service
Labor, Department of

Occupational Safety and Health Administration (OSHA)
Transportation, Department of

Federal Highway Administration
Water Resources Council

(b) State of Oregon Agencies:

Administrative Services, Department of

Agriculture, Department of

Natural Resources Division
Soil and Water Conservation District
Consumer and Business Services, Department of
Insurance Division

Oregon Occupational Safety and Health Division (OR-OSHA)
Energy, Office of

Environmental Quality, Department of (DEQ)
Fish and Wildlife, Department of

Forestry, Department of
Human Resources, Department of
Labor and Industries, Bureau of

Land Conservation and Development Department
Parks and Recreation, Department of
State Lands, Division of

Water Resources Department

(c) Local Agencies:

City Councils
County Courts
County Commissioners, Boards of
Design Commissions
Historical Preservation Commissions
Lane Regional Air Pollution Authority (LRAPA)
Planning Commissions

Port Districts
Special Districts

(d) Oregon Federally Recognized Tribal Governments:

Burns Paiute Tribe

Confederated Tribes of Coos, Lower Umpqua and Siuslaw Indians
Confederated Tribes of Grand Ronde

Confederated Tribes of Siletz
Confederated Tribes of Umatilla Indian Reservation
Confederated Tribes of Warm Springs
Coquille Tribe
Cow Creek Band of Umpqua Indians
Klamath Tribe

00170.02 Permits, Licenses, and Taxes

As required to accomplish the Work, the Contractor shall do the following:

- Obtain all necessary permits and licenses, except for those noted in 00170.03;
- Pay all applicable charges, fees and taxes, except for those noted in 00170.03;
- Give all notices required by applicable Laws, or under the terms of the Contract;
- Comply with ORS 274.530 relating to lease of stream beds by Oregon Division of State Lands;
- License, in the State of Oregon, all vehicles subject to licensing;
- Comply with ORS 477.625 and ORS 527.670 relating to clearing and fire hazards on forest lands; and
- Comply with all orders and permits issued by a governmental authority, whether local, State, or federal.

00170.03 Furnishing Right-of-Way and Permits

Unless required to be obtained in the name of the Contractor, the Agency will obtain and pay for the following when they are required by the applicable Laws or by Plans or Specifications:

- Building construction permits, not including specialty work such as heating, ventilation, air conditioning, or electrical;

00170.04 Patents, Copyrights, and Trademarks

Prior to use of designs, devices, materials, or processes protected by patent, copyright, or trademark, the Contractor shall obtain from the Entity entitled to enforce the patent, copyright, or trademark all necessary evidence of legal right.

The Contractor shall indemnify, defend and hold harmless the Agency and all third parties and political subdivisions having a possessory or ownership interest or regulatory authority over the Project or Project Site from claims of patent, copyright or trademark infringement, and from costs, expenses and damages the Contractor or Agency may be obligated to pay as a result of such infringement during or after completing the Work.

00170.05 Assignment of Antitrust Rights

The Contractor irrevocably assigns to the Agency any claim for relief or cause of action the Contractor acquires during the term of the Contract, or which may accrue thereafter, by reason of any violation of:

- Title 15 (Commerce and Trade), United States Code;

- ORS 646.725; and
- ORS 646.730.

In connection with this assignment, it is an express obligation of the Contractor to take no action that would in any way impair or diminish the value of the rights assigned to the Agency according to the provisions of this Subsection. Further, it is the express obligation of the Contractor to take all action necessary to preserve the rights assigned. It is an express obligation of the Contractor to advise the Agency's legal counsel:

- In advance, of its intention to commence any action involving such claims for relief or causes of action;
- Immediately upon becoming aware of the fact that an action involving such claims for relief or causes of action has been commenced by some other person or persons;
- The date on which it notified the obligor(s) of any such claims for relief or causes of action of the fact of the Contractor's assignment to the Agency according to the provisions of this Subsection; and
- Immediately upon the discovery of any such antitrust claim for relief or cause of action.

In the event any payment is made to the Contractor under any such claims for relief, the Contractor shall promptly pay the full sum over to the Agency. In the event the Contractor fails to make such payment, the Agency may deduct the amount from monies due or to become due the Contractor under the Contract.

00170.10 Required Payments by Contractors

The Contractor shall comply with ORS 279C.505 and ORS 279C.515 during the term of the Contract.

(a) Prompt Payment by Contractor for Labor and Materials - As required by ORS 279C.505, the Contractor shall:

- Make payment promptly, as due, to all Entities supplying labor or Materials under the Contract;
- Pay all contributions or amounts due the Industrial Accident Fund, whether from the Contractor or a Subcontractor, incurred in the performance of the Contract;
- Not permit any lien or claim to be filed against the State or any political subdivision thereof, on account of any labor or Material furnished in performance of the Contract; and
- Pay to the Department of Revenue all sums withheld from employees according to ORS 316.167.

(b) Prompt Payment by Contractor to First-Tier Subcontractor(s) - According to ORS 279C.580(3)(a), after the Contractor has determined and certified to the Agency that one or more of its Subcontractors has satisfactorily performed subcontracted Work, the Contractor may request payment from the Agency for the Work, and shall pay the Subcontractor(s) within ten Calendar Days out of such amounts as the Agency has paid to the Contractor for the subcontracted Work.

(c) Interest on Unpaid Amount - If the Contractor or a first-tier Subcontractor fails, neglects, or refuses to make payment to an Entity furnishing labor or Materials in connection with the Contract within 30 days after the Contractor's receipt of payment, the Contractor or first-tier Subcontractor shall owe the Entity the amount due plus interest charges that begin at the end of the 10 day period within which payment is due under ORS 279C.580(3) and that end upon final payment, unless payment is subject to a good-faith dispute as defined in ORS 279C.580(5)(b). As required by ORS 279C.515(2), the rate of interest on the amount due shall be nine percent per annum. The amount of interest shall not be waived.

(d) Agency's Payment of the Contractor's Prompt Payment Obligations - If the Contractor fails, neglects or refuses to make prompt payment of any invoice or other demand for payment for labor or services furnished to the Contractor or a Subcontractor by any Entity in connection with the Contract as such payment becomes due, the Agency may pay the Entity furnishing the labor or services and charge the amount of the payment against monies due or to become due the Contractor under the Contract. (The Agency has no obligation to pay these Entities, and will not normally do so, but will refer them to the Contractor and the Contractor's Surety.)

The payment of a claim by the Agency in the manner authorized in this Subsection shall not relieve the Contractor or the Contractor's Surety from obligations with respect to any such claims.

(e) Right to Complain to the Construction Contractors Board - If the Contractor or a Subcontractor fails, neglects, or refuses to make payment to an Entity furnishing labor or Materials in connection with the Contract, the Entity may file a complaint with the Construction Contractors Board, unless payment is subject to a good-faith dispute as defined in ORS 279C.580(5)(b).

(f) Notice of Claim Against Bond - An Entity (which by definition includes a natural person) claiming not to have been paid in full for labor or Materials supplied for the prosecution of the Work may have a right of action on the Contractor's Payment Bond as provided in ORS 279C.600 and ORS 279C.605.

The Commissioner of the Bureau of Labor and Industries (BOLI) may have a right of action on the Contractor's and Subcontractors' public works bonds and Payment Bonds for workers who have not been paid in full, as provided in ORS 279C.600 and ORS 279C.605.

00170.20 Public Works Bond

Before starting Work, the Contractor and subcontractors shall each file with the Construction Contractors Board, and maintain in full force and effect, a separate public works bond, in the amount of $30,000 unless otherwise exempt, as required by ORS 279C.830(3) and ORS 279C.836. The Contractor shall verify subcontractors have filed a public works bond before the subcontractor begins Work.

00170.32 Protection of Navigable Waters

The Contractor shall comply with all applicable Laws, including without limitation the Federal River and Harbor Act of March 3, 1899 and its amendments. The Contractor shall not interfere with waterway navigation or impair navigable depths or clearances, except as U.S. Coast Guard or Corps of Engineer permits allow.

00170.60 Safety, Health, and Sanitation Provisions

The Contractor shall comply with all Laws concerning safety, health, and sanitation standards. The Contractor shall not require workers to perform Work under conditions that are hazardous, dangerous, or unsanitary.

Workers exposed to traffic shall wear upper body garments or safety vests that are highly visible and meet the requirements of 00225.27.

Workers exposed to falling or flying objects or electrical shock shall wear hard hats.

Upon their presentation of proper credentials, the Contractor shall allow inspectors of the U.S. Occupational Safety and Health Administration (OSHA) and the Oregon Occupational Safety and Health Division (OR-OSHA) to inspect the Work and Project Site without delay and without an inspection warrant.

According to ORS 468A.715 and ORS 468A.720, the Contractor or a Subcontractor who performs Project Work involving asbestos abatement shall possess a valid DEQ asbestos abatement license.

00170.61 Industrial Accident Protection

(a) Workers' Compensation - The Contractor shall provide workers' compensation coverage for on-the-job injuries as required by 00170.70(d).

00170.62 Labor Nondiscrimination

The Contractor shall comply with all Laws concerning equal employment opportunity, including without limitation those prohibiting discrimination because of race, religion, color, sex, disability, or national origin.

00170.63 Payment for Medical Care

According to ORS 279C.530, the Contractor shall promptly, as due, make payment to any person, copartnership, association or corporation furnishing medical, surgical and hospital care services or other needed care and attention, incident to sickness or injury, to the employees of the Contractor, of all sums that the Contractor agrees to pay for the services and all moneys and sums that the Contractor collected or deducted from the wages of employees under any law, contract or agreement for the purpose of providing or paying for the services.

00170.65 Minimum Wage and Overtime Rates for Public Works Projects

(a) General - The Contractor shall be responsible for investigating local labor conditions. The Agency does not imply that labor can be obtained at the minimum hourly wage rates specified in State or federal wage rate publications, and no increase in the Contract Amount will be made if wage rates paid are more than those listed.

For work performed on Indian Reservations, tribally-owned businesses and businesses owned by tribally-enrolled Native Americans are not subject to the Oregon Bureau of Labor and Industries overtime requirements. These businesses are subject to the Federal Contract Work Hours and Safety Standards Act, which states that employees must be paid time and one-half for all hours worked in excess of forty hours per week.

The Contractor shall comply fully with the provisions of ORS 279C.800 through ORS 279C.870. Documents establishing those conditions, as determined by the Commissioner of the Bureau of Labor and Industries (BOLI), are included in the Contract. The Contractor shall pay workers at no less than the specified minimum hourly rate of wage, and shall include that requirement in all subcontracts according to 00170.65(b) and 00170.65(c).

As required in ORS 279C.845 the Agency will retain 25% of any amount earned by the Contractor on the project until the Contractor has filed the certified statements required in ORS 279C.845 or in FHWA Form 1273. The Agency will pay to the Contractor the amount retained within 14 days after the Contractor files the required certified statements, regardless of whether a subcontractor has failed to file certified statements.

As required in ORS 279C.845 the Contractor shall retain 25% of any amount earned by a first tier subcontractor on the project until the first tier subcontractor has filed with the Agency the certified statements required in ORS 279C.845 or in FHWA Form 1273. Before paying any amount retained, the Contractor shall verify that the first tier subcontractor has filed the certified statement. Within 14 days after the first tier subcontractor files the required certified statement the Contractor shall pay the first tier subcontractor any amount retained.

The Contractor shall comply with the pertinent provisions of ORS 279C.520 and ORS 279C.540. According to ORS 279C.520, no person shall be employed to perform Work under this Contract for more than 10 hours in any one Day, or 40 hours in any one week, except in cases of necessity, emergency, or where public policy absolutely requires it. In such instances, the Contractor shall pay the employee at least time and a half pay:

- For all overtime in excess of eight hours a Day or 40 hours in any one week when the work week is five Days, Monday through Friday; or
- For all overtime in excess of 10 hours a Day or 40 hours in any one week when the work week is four Days, Monday through Friday; and
- For all Work performed on Saturday and on any legal holiday specified in ORS 279C.540.

The above will not apply to the Contractor's Work under this Contract if the Contractor is currently a party to a collective bargaining agreement with any labor organization.

According to ORS 279C.845, the Contractor and every subcontractor shall submit written certified statements to the Engineer on the form prescribed by the Commissioner of the Bureau of Labor and Industries, certifying the hourly rate of wage paid each worker which the Contractor or the subcontractor has employed on

the Project and further certifying that no worker employed on the Project has been paid less than the prevailing rate of wage or less than the minimum hourly rate of wage specified in the Contract, which certificate and statement shall be verified by the oath of the Contractor or subcontractor that the Contractor or subcontractor has read such statement and certificate and knows the contents thereof and that the same is true to the Contractor or subcontractor's best knowledge and belief. The certified statements shall set out accurately and completely the payroll records for the prior week including the name and address of each worker, the worker's correct classification, rate of pay, daily and weekly number of hours worked, deductions made and actual wages paid. Certified statements for each week during which the Contractor or subcontractor has employed a worker on the Project shall be submitted once a month, by the fifth Calendar Day of the following month.

The Contractor and subcontractors shall preserve the certified statements for a period of six years from the date of completion of the Contract.

(b) When Federal Funds Are Involved - The Contractor shall pay the wage rate and fringe benefits listed in the publication "General Wage Determinations Issued Under the Davis-Bacon and Related Acts" from the U.S. Secretary of Labor, unless a higher wage rate and fringe benefits are required according to ORS 279C.838, as provided in the Oregon Bureau of Labor and Industries (BOLI) publication titled "Prevailing Wage Rates for Public Works Contracts in Oregon subject to BOTH the State PWR and federal Davis-Bacon Act", which are incorporated herein by reference. See the Project Wage Rates page included with the Special Provisions for the web site address where these publications are available.

For Federal-Aid projects, the Contractor shall comply with the provisions of FHWA Form 1273, "Required Contract Provisions Federal-Aid Construction Contracts", and ORS 279C.520 (see (a) of this Subsection) and ORS 279C.540.

With regard to overtime pay, the Contractor shall comply with the provision affording the greatest compensation.

(c) When No Federal Funds Are Involved - The Contractor shall pay the wage rate and fringe benefits listed in the BOLI publication titled "Prevailing Wage Rates for Public Works Contracts in Oregon" which is incorporated by reference. See the Prevailing Wage Rates page included with the Special Provisions for the web site address where this publication is available.

Except for businesses subject to the Federal Contract Work Hours and Safety Standards Act as described in 00170.65(a), the Contractor shall comply with the overtime requirements of ORS 279C.520, ORS 279C.540 (see (a) and (b) of this Subsection), and ORS 279C.845.

(d) Time Limitation on Claim for Overtime - According to ORS 279C.545, the Contractor shall:

(1) Cause a circular, clearly printed in blackface pica type and containing a copy of ORS 279C.545, to be posted in a prominent place alongside the door of the timekeeper's office or in a similar place which is readily available and freely visible to any or all workers employed to perform Work; and

(2) Maintain such circular continuously posted from the inception to the completion of the Contract on which workers are or have been employed.

(e) Owner/Operator Data - The Contractor shall furnish data to the Engineer for each owner/operator providing trucking services. The data must be provided before the time the services are provided and must include without limitation for each owner/operator:

- Drivers name;
- Copy of drivers license;
- Vehicle identification number;
- Copy of vehicle registration;
- Motor vehicle license plate number;
- Motor Carrier Plate Number;
- Copy of ODOT Motor Carrier 1A Permit; and
- Name of owner/operator from the side of the truck.

00170.70 Insurance

(a) Insurance Coverages - The Contractor shall obtain, at its expense, and keep in effect during the term of the Contract, the insurance coverages listed below. The Contractor may however, contractually obligate an appropriate subcontractor to obtain, at the subcontractor's expense or at the Contractor's expense, and keep in effect during the term of the Contract, pollution liability coverage, asbestos liability, lead liability, or automobile liability with pollution coverages, or such other types of insurance coverage that, before execution of the Contract, the Agency approves as types of insurance coverage that may be obtained by appropriate subcontractors. If both the Contractor and an appropriate subcontractor will perform pollution related Work or other Work that would be covered by the other above-described types of insurance permitted to be obtained by an appropriate subcontractor, the insurance coverages listed below that correspond to such Work shall be obtained at the Contractor's or subcontractor's expense, and shall cover the liability of the Contractor and the subcontractor, either under the same or separate insurance policies.

- **Commercial General Liability** - Commercial General Liability Insurance covering bodily injury and property damage in a form and with coverages that are satisfactory to the Agency. This insurance shall include personal and advertising injury liability and products and completed operations coverage. Coverage may be written in combination with Commercial Automobile Liability Insurance with separate limits for Commercial General Liability and Commercial Automobile Liability. Coverage shall be written on an occurrence basis. Combined single limit per occurrence shall not be less than the dollar amount indicated in the Special Provisions. The annual aggregate limit shall not be less than the dollar amount indicated in the Special Provisions. The policy shall be endorsed to state that the annual aggregate limit of liability shall apply separately to the Contract.

  If the Contractor's Commercial General Liability Insurance limits are less than the required limits stated above, the Contractor shall obtain Excess or Umbrella Liability Insurance with sufficient limits that when added to the Contractor's Commercial General Liability Insurance limits the total combined limits of Commercial General Liability Insurance and Excess or Umbrella Liability

Insurance equal or exceed the above-stated Commercial General Liability Insurance limits required for this Project. The above-stated combined single limit per occurrence and the above-stated annual aggregate limit must each be met. Excess or Umbrella Liability Insurance coverage shall extend to the same perils, terms, and conditions as the underlying Commercial General Liability Insurance coverage.

- **Pollution Liability** - If indicated by Special Provision, Pollution Liability Insurance covering the Contractor's liability, or the liability of an appropriate subcontractor, if the coverage is obtained by the subcontractor, for bodily injury and property damage, and environmental damage resulting from sudden and accidental pollution, gradual pollution, and related clean-up costs incurred by the Contractor, or by the subcontractor if the coverage is obtained by the subcontractor, while performing Work required by the Contract. If the coverage us obtained by the Contractor, the coverage may be written in combination with the Commercial General Liability Insurance with separate limits for Pollution Liability and Commercial General Liability. Combined single limit per occurrence shall not be less than the dollar amount indicated in the Special Provisions. The annual aggregate limit shall not be less than the dollar amount indicated in the Special Provisions. The policy shall be endorsed to state that the annual aggregate limit of liability shall apply separately to the Contract.

- **Asbestos Liability** - If indicated by Special Provision, the Contractor, or the subcontractor, if the coverage is obtained by the subcontractor, shall provide an Asbestos Liability endorsement to the pollution liability coverage. If an endorsement cannot be obtained, The Contractor or subcontractor shall provide separate Asbestos Liability Insurance at the same combined single limit per occurrence and annual aggregate limit as the Pollution Liability Insurance with the policy endorsed to state that the annual aggregate limit of liability shall apply separately to the Contract.

- **Lead Liability** - If indicated by Special Provision, the Contractor, or the subcontractor, if the coverage is obtained by the subcontractor, shall provide a Lead Liability endorsement to the pollution liability coverage. If an endorsement cannot be obtained, the Contractor or subcontractor shall provide separate Lead Liability Insurance at the same combined single limit per occurrence and annual aggregate limit as the Pollution Liability Insurance with the separate policy endorsed to state that the annual aggregate limit of liability shall apply separately to the Contract.

- **Commercial Automobile Liability** - Commercial Automobile Liability Insurance covering all owned, non-owned, and hired vehicles. This coverage may be written in combination with the Commercial General Liability Insurance with separate limits for Commercial Automobile Liability and Commercial General Liability. Combined single limit per occurrence shall not be less than the dollar amount indicated in the Special Provisions. If this coverage is written in combination with the Commercial General Liability, the policy shall be endorsed to state that the Commercial General Liability annual aggregate limit shall apply separately to the Contract.

- **Commercial Automobile Liability with Pollution Coverage** - If indicated by Special Provision, the Contractor, or the subcontractor, if the coverage is obtained by the subcontractor, shall provide Commercial Automobile Liability Insurance with Pollution coverage covering the Contractor's liability, or the liability of an appropriate subcontractor, if the coverage is obtained by the subcontractor, for bodily injury and property damage, and environmental damage arising out of the use of all owned, non-owned, or hired vehicles while performing Work under the Contract. If the coverage is obtained by the Contractor, the coverage may be written in combination with the Commercial General Liability Insurance with separate limits for Commercial Automobile Liability with Pollution Coverage and Commercial General Liability. Combined single limit per occurrence shall not be less than the dollar amount indicated in the Special Provisions or the amount required by the U.S. Department of Transportation, whichever is greater. If this coverage is written in combination with the Commercial General Liability, the policy shall be endorsed to state that the Commercial General Liability annual aggregate limit shall apply separately to the Contract.

  Commercial Automobile Liability with Pollution Coverage is required for this Project because the Project includes pollution related Work. If the Contractor will be performing pollution related Work, this coverage covering the Contractor must be provided. If an appropriate subcontractor, but not the Contractor, will perform the pollution related Work, Commercial Automobile Liability with Pollution Coverage covering the subcontractor, but not the Contractor, must be provided, however, the Contractor shall provide Commercial Automobile Liability insurance coverage covering the Contractor as provided in the Commercial Automobile Liability bullet above. If both the Contractor and an appropriate subcontractor will be performing pollution related Work, Commercial Automobile Liability with Pollution Coverage covering both the Contractor and the subcontractor shall be provided, and the Contractor may provide the coverage covering both the Contractor and the subcontractor, or the Contractor and the subcontractor may provide their own, separate Commercial Automobile Liability with Pollution coverage's.

(b) Tail Coverage - If any of the required liability insurance coverage's of 00170.70(a) are on a "claims made" basis, "tail" coverage will be required at the completion of the Contract for a duration of 24 months, or the maximum time period reasonably available in the marketplace. The Contractor shall furnish certification of "tail" coverage as described or continuous "claims made" liability coverage for 24 months following Contract completion. Continuous "claims made" coverage will be acceptable in lieu of "tail" coverage provided its retroactive date is on or before the effective date of the Contract. If Continuous "claims made" coverage is used, the Contractor shall keep the coverage in effect for duration of not less than 24 months from the end of the Contract. This will be a condition of Final Acceptance.

(c) Additional Insured - The liability insurance coverage's of 00170.70(a) shall include the Agency, the Agency's governing body, board, or Commission and its members, and the Agency's officers and employees as Additional Insured, but only with respect to the Contractor's activities to be performed under the Contract. Coverage shall be primary and non-contributory with any other insurance and self-insurance. The liability coverage's of 00170.70(a) that are permitted by the Agency to be obtained by

an appropriate subcontractor shall include all of the foregoing as Additional Insured and shall also include Contractor and its officers and employees as Additional Insured.

(d) Workers' Compensation - All employers, including the Contractor and its Subcontractors, if any, that employ subject workers who are performing Work or providing labor or Materials under the Contract in the State shall comply with ORS 656.017 and provide the required Workers' Compensation coverage, unless such employers are exempt under ORS 656.126. The Contractor shall ensure that each of its Subcontractors complies with these requirements.

The Contractor shall certify in the Contract that the Contractor is registered by the Oregon Workers' Compensation Division either as a carrier-insured employer, a self-insured employer, an exempt employer, or is an independent contractor who will perform the Work without the assistance of others.

The Contractor shall ensure that its insurance carrier files a guaranty contract with the Oregon Workers' Compensation Division before performing any Work.

(e) Notice of Cancellation or Change - The Contractor shall not cancel, change materially, or take any action showing intent not to renew the insurance coverage(s) without 30 days' advance written notice from the Contractor or its insurer(s) to the Agency. The Contractor shall be responsible for ensuring that insurance coverage(s) obtained by an appropriate subcontractor, as permitted by the Agency under 00170.70(a), are not cancelled, changed materially, or have any action taken by the subcontractor showing intent not to renew the insurance coverage(s) without 30 days' advance written notice from the Contractor or the insurer(s) to the Agency. Any failure to comply with the reporting provisions of this insurance shall not affect the coverage(s) provided to the Agency, County, City, or other applicable political jurisdiction or to the Agency's governing body, board, or Commission and its members, and the Agency's officers and employees.

(f) Certificate(s) of Insurance - As evidence of the insurance coverage's required by this Contract, the Contractor shall furnish Certificate(s) of Insurance to the Agency at the time(s) provided in 00130.50(a). As evidence of insurance coverage's required by this Contract but permitted by the Agency under 00170.70(a) to be obtained by an appropriate subcontractor, the Contractor shall furnish Certificate(s) of Insurance to the Agency for such coverage's together with the Contractor's request under 00180.21 for approval of the subcontract with that subcontractor. The Certificate(s) will specify all of the parties who are Additional Insured. The Contractor shall obtain, or ensure that the appropriate subcontractors obtain, insurance coverage's required under this Contract from insurance companies or entities acceptable to the Agency and authorized to issue insurance in the State. The Contractor, or the appropriate subcontractor, but not the Agency, shall be responsible for paying all deductibles, self-insured retentions and/or self-insurance included under these provisions.

(g) Builders' Risk - If indicated by Special Provision, the Contractor shall obtain, at its expense, and keep in effect during the term of the Contract, Builders' Risk insurance on an all risks of direct physical loss basis, including, without limitation, earthquake and flood damage, for an amount equal to at least the value indicated in the Special Provisions. Any deductible shall not exceed $50,000 for each loss, except that the

earthquake and flood deductible shall not exceed 5% of each loss or $50,000, whichever is greater. The policy shall include the Agency as loss payee.

00170.71 Independent Contractor Status

The service or services to be rendered under this Contract are those of an independent contractor. The Contractor is not an officer, employee, or agent of the State as those terms are used in ORS 30.265.

00170.72 Indemnity/Hold Harmless

To the fullest extent permitted by law, and except to the extent otherwise void under ORS 30.140, the Contractor shall indemnify, defend (with counsel approved by the Agency) and hold harmless the Agency, Agency's Authorized Representative, Architect/Engineer, Architect/Engineer's consultants, and their respective officers, directors, agents, employees, partners, members, stockholders and affiliated companies (collectively "Indemnities") from and against all liabilities, damages, losses, claims, expenses (including reasonable attorney fees), demands and actions of any nature whatsoever which arise out of, result from or are related to the following:

- Any damage, injury, loss, expense, inconveniences or delay described in this Subsection.
- Any accident or occurrence which happens or is alleged to have happened in or about the Project Site or any place where the Work is being performed, or in the vicinity of either, at any time prior to the time the Work is fully completed in all respects.
- Any failure of the Contractor to observe or perform any duty or obligation under the Contract Documents which is to be observed or performed by the Contractor, or any breach of any agreement, representation or warranty of the Contractor contained in the Contract Documents or in any subcontract.
- The negligent acts or omissions of the Contractor, a subcontractor or anyone directly or indirectly employed by them or any one of them or anyone for whose acts they may be liable, regardless of whether or not such claim, damage, loss or expense is caused in part by a party indemnified hereunder.
- Any lien filed upon the project or bond claim in connection with the Work.

Such obligation shall not be construed to negate, abridge, or reduce other rights or obligations of indemnity which would otherwise exist as to a party or person described in this Subsection.

In claims against any person or entity indemnified under this Subsection by an employee of the Contractor, a Subcontractor, anyone directly or indirectly employed by them or anyone for whose acts they may be liable, the indemnification obligation under this Subsection shall not be limited by a limitation on amount or type of damages, compensation or benefits payable by or for the Contractor or a Subcontractor under workers' compensation acts, disability benefit acts or other employee benefit acts.

00170.74 Employee Drug Testing Program

As required by ORS 279C.505 (2), the Contractor shall have in place, and maintain during the period of the Contract, an employee drug-testing program. The Agency retains the right to audit and/or monitor the program. On request by the Engineer, the Contractor shall furnish a copy of the employee drug-testing program.

00170.78 Conflict of Interest

The Contractor shall not give or offer any gift, loan, or other thing of value to any member of the Agency's governing body or employee of the Agency in connection with the award or performance of any Contract.

The Contractor shall not rent, lease, or purchase Materials, supplies, or Equipment, with or through any Agency employee or member of the Agency's governing body.

No ex-employee of the Agency who has worked for the Agency on any phase of the Project within the prior two years may be employed by the Contractor to perform Work on the Project.

00170.79 Third Party Beneficiary

There are no third-party beneficiaries of the Contract.

00170.80 Responsibility for Damage to Work

(a) Responsibility for Damage in General - The Contractor shall perform Work, and furnish Materials and Equipment for incorporation into the Work, at the Contractor's own risk, until the entire Project has been completed and accepted by the Agency. The Contractor shall repair all damages to Work performed, Materials supplied, and Equipment incorporated into the Work, except as otherwise provided in this Section.

(b) Repair of Damage to Work - Until Final Acceptance, the Contractor shall promptly rebuild, repair, restore, and make good damages to all portions of the permanent or temporary Work, except to the extent the Agency has assumed responsibility according to the provisions of (c) below. Perform all repairs of damage to Work at no additional cost to the Agency, except for repairs necessitated by damage caused by:

- Acts of God or Nature, as defined in Section 00110; or
- Actions of governmental authorities.

(c) Vandalism and Theft – Vandalism includes damage to or destruction of Work or portions of Work that remain on the Project Site resulting from vandalism, criminal mischief, arson, or other criminal or illegal behavior.

The Contractor shall provide reasonable protection of the Work from vandalism until Final Acceptance. If reasonable protection has been provided, the Contractor's responsibility for damage resulting from vandalism will be limited to $5,000 per occurrence. Requests for reimbursement of amounts in excess of $5,000 shall be in writing and directed to the Engineer. Upon receipt, the Engineer will investigate, evaluate the amount of damages and their cause, and determine whether, and how much, the Contractor will be recompensed.

Theft includes the loss of Work or portions of Work that are lost or stolen or otherwise unaccounted for from the Project Site or from Materials or fabrication locations. The Contractor shall remain solely responsible for all losses caused by theft, including without limitation theft that occurs in conjunction with vandalism.

00170.82 Responsibility for Damage to Property and Facilities

(a) In General - As used in this Subsection, the term "Contractor" shall include the Contractor's agents, Subcontractors, and all workers performing Work under the Contract; and the term "damage" shall include without limitation soiling or staining surfaces by tracking or splashing mud, asphalt, and other materials, as well as damage of a more serious nature. The Contractor shall be solely responsible for damages arising from:

- The Contractor's operations;
- The Contractor's negligence, gross negligence, or intentional wrongful acts; and
- The Contractor's failure to comply with any Contract provision.

The Agency may withhold funds due the Contractor or the Contractor's Surety until all lawsuits, actions, and claims for injuries or damages are resolved, and satisfactory evidence of resolution is furnished to the Agency.

(b) Protection and Restoration of Agency Property and Facilities - The following requirements apply to improvements that are existing, under construction, or completed. The Contractor shall:

- Provide adequate protection to avoid damaging Agency property and facilities;
- Be responsible for damage to Agency property and facilities caused by or resulting from the Contractor's operations; and
- Clean up and restore such damage by repair, rebuilding, replacement, or compensation, as determined by the Engineer.

(c) Protection and Restoration of Non-Agency Property and Facilities - The Contractor shall determine the location of properties and facilities that could be damaged by the Contractor's operations, and shall protect them from damage. The Contractor shall protect monuments and property marks until the Engineer has referenced their location and authorized their removal. The Contractor shall restore property or facilities damaged by its operations to the condition that existed before the damage, at no additional compensation.

The Contractor shall provide temporary facilities when needed, e.g., to maintain normal service or as directed by the Engineer, until the required repair, rebuilding, or replacement is accomplished.

00170.85 Responsibility for Defective Work

The Contractor shall make good any defective Work, Materials or Equipment incorporated into the Work, according to the provisions of Section 00150.

(a) Latent Defects - The Contractor shall remain liable for all latent defects resulting from causes other than fraud or gross mistakes that amount to fraud until the expiration of the Performance Bond, Warranty Bond, or warranty period, whichever expires last. The Contractor shall remain liable for all latent defects resulting from fraud or gross mistakes that amount to fraud regardless of when those latent defects may be discovered, and regardless of whether such discovery occurs outside any applicable Performance Bond, Warranty Bond, or warranty period.

(b) Contractor Furnished Warranties - Warranties for Local Agency Projects - For those Contracts that are developed, advertised, awarded, and administered by Local Agencies, and do not contain federal funding, this 00170.85(b) warranty applies.

The Contractor shall warrant all Work and workmanship, including Changed Work, Additional Work, Incidental Work, On-Site Work, and Extra Work, and Materials and Equipment incorporated in the Work, for one year from the date of Third Notification, except that manufacturers' warranties and extended warra nties according to 00170.85(c) shall not be abridged.

The Contractor shall be responsible for meeting the technical and performance Specifications required, making good the Work, and for all repairs of damage to other improvements, natural and artificial structures, systems, equipment, and vegetation caused by, or resulting in whole or in part from occurrences beginning during the warranty period and are the result of defects in Materials, Equipment, and workmanship. The Contractor shall be responsible for all costs associated with site cleanup and remediation caused by, or resulting in whole or in part from, defects in Materials, Equipment, or workmanship.

Within 10 Calendar Days of the Agency's written notice of defects, the Contractor, or the Contractor's Surety, shall vigorously and continuously correct and repair the defects and all related damage. If the Contractor or the Contractor's Surety fails to correct and repair the defects, the Agency may have the correction and repair done by others. The Contractor or Contractor's Surety shall promptly reimburse the Agency for all expenses incurred to correct and repair the defects.

In the event of an emergency, where delay could result in serious loss or damage, the Agency may make emergency corrections and repairs, without written notice. The Contractor or Contractor's Surety shall promptly reimburse the Agency for all expenses incurred to correct and repair the defects.

Corrections, repairs, replacements or changes shall be warranted for an additional one year period beginning on the date of the Agency's acceptance of the corrections, repairs, replacements or changes.

Without limiting the general applicability of other survival clauses under the Contract, this warranty provision shall survive expiration or termination of the Contract.

(c) Manufacturer Warranties and Guarantees:

(1) Manufacturer Warranties - For those Specification Sections referencing this 00170.85(c-1) Subsection, the Contractor shall furnish Warranties from the Manufacturer and signed by a Manufacturer's Representative.

The Warranty period will be specified in the applicable Specification Section for which it applies.

The Warranty will start on the date the Engineer accepts the work and authorizes final payment unless otherwise specified in the Contract.

When the Agency makes written notification to the Manufacturer of failure of an item covered by this Warranty, the Warranty period will stop for the effected item or the portion of the effected item that failed, as applicable, until the required repairs or replacements are made and accepted. All repaired or replaced items shall meet current specifications, unless otherwise specified in the Contract, and will be warranted for the remaining Warranty period.

Warranty work shall be performed when weather permits. If, in the opinion of the Engineer, temporary repairs are necessary, the temporary repairs will be made by the Agency or an independent contractor at the Manufacturer's expense. The Manufacturer shall replace all temporary repairs at no additional cost to the Agency.

The Manufacturer shall provide all required traffic control during repair or replacement of failed items at no additional cost to the Agency.

(2) Trade Practice Guarantees - For those Items installed on the Project that have customary trade practice guarantees, the Contractor shall furnish the guarantees to the Engineer at the completion of the Contract.

Section 00180 - Prosecution and Progress

00180.00 Scope

This Section consists of requirements for assignment of the Contract, subcontracting, time for performance, Contract responsibility, suspensions, terminations, and related provisions.

00180.05 Assignment/Delegation of Contract

Unless the Agency gives prior written consent, the Contractor shall not assign, delegate, sell, or transfer to any Entity, or otherwise dispose of any Contract rights or obligations, including without limitation:

- The power to execute or perform the Contract; or
- Any of its right, title or interest in the Contract.

Any attempted assignment, delegation, or disposition without prior Agency consent shall be void.

Such Agency consent will not normally be given except for the assignment of funds due under the Contract, as provided in 00180.06.

If written Agency consent is given to assign, delegate, or otherwise dispose of any Contract rights or obligations, it shall not relieve the Contractor or its Surety of any part of their responsibility under the Contract.

00180.06 Assignment of Funds Due under the Contract

Assignment of funds due or to become due under the Contract to the Contractor will not be permitted unless:

- The assignment request is made on the form provided by the Agency;
- The Contractor secures the written consent of the Contractor's Surety to the assignment; and
- The Engineer approves the assignment.

00180.10 Responsibility for Contract

The Contractor shall direct and coordinate the operations of its employees, Subcontractors and agents performing Work, and see that the Engineer's orders are carried out promptly. The Contractor's failure to direct, supervise and control its employees, Subcontractors and agents performing Work will result in one or more of the following actions, as the Engineer deems appropriate:

- Suspension of the Work;
- Withholding of Contract payments, as necessary to protect the Agency;
- Ordering removal of individuals from the Project Site; or
- Termination of the Contract.

00180.15 Agency's Right to Do Work at Contractor's Expense

Except as otherwise provided in 00150.75 and 00220.60, if the Contractor neglects to prosecute the Work properly or fails to perform any provision of the Contract, the Agency may, after two Calendar Days' written notice, correct the deficiencies at the Contractor's expense. In situations where the Engineer reasonably believes there is danger to life or property, the Agency may immediately and without notice correct the deficiencies at the Contractor's expense.

Action by the Agency under this provision will not prejudice any other remedy it may have.

00180.20 Subcontracting Limitations

(a) General - The Contractor's own organization shall perform Work amounting to at least 50% of the original Contract Amount. The value of subcontracted Work is the full compensation to be paid to the Subcontractor(s) for all pay items in the Subcontract(s).

(b) Own Organization - The term "own organization", as used in Section 00180, includes only employees of the Contractor, Equipment owned or rented by the Contractor, Incidental rental of operated Equipment, and Materials and Equipment to be incorporated into the Work purchased or produced by the Contractor.

(c) Rental of Operated Equipment - The use of Equipment rented with operators will be allowed without a subcontract only when the following requirements are met:

(1) Written Request - The Contractor has submitted to the Engineer a written request describing the service to be provided, its estimated cost, and the estimated duration. The Engineer must approve the request before the service is provided.

(2) Limitations - The use of Equipment rented with operators is limited to the following services:

- Truck hauling of Materials (If the trucking is by an owner/operator, in addition to the requirements of 00170.65(e), each truck shall have the name of the owner/operator clearly displayed on the side of the truck); or
- Performing minor, Incidental, short-duration work under the direct supervision of the Contractor or Subcontractor, with Equipment not customarily owned, leased, or operated by a Contractor, or with Equipment that is temporarily unavailable to the Contractor.

(3) Submittals - The Contractor shall provide the Engineer with a copy of the rental agreement or purchase order covering the service to be provided. For owner/operator trucking, attach copies of the data required under 00170.65(e). The Contractor shall make certain that the provider of approved services submits payrolls required under Section 00170 and complies with applicable Contract provisions. The service provider will not be considered a Subcontractor under the Contract, but will be considered an agent of the Contractor in the performance of Work.

(4) Revocation of Approval - The Engineer may revoke approval for the services provided through rented, operated Equipment at any time the Engineer determines that the work is outside that authorized under 00180.20(c-2). Unless the Contractor promptly submits to the Engineer a subcontract agreement for consent under 00180.21, the service provider shall be immediately removed from the Project Site.

00180.21 Subcontracting

(a) General - The Contractor shall not subcontract or perform any portion of the Contract by other than the Contractor's own organization without the Agency's prior written consent. A request for consent to subcontract, at any tier, solely for the furnishing of a labor force will not be considered.

A written request for consent to subcontract any portion of the Contract at any tier shall be submitted to the Engineer, and when required by the Engineer, shall be accompanied by background information showing that the organization proposed to perform the Work is experienced and equipped for such Work. The Agency will review the Contractor's submission to verify compliance with Contract requirements, confirm the percentage of Work subcontracted, and evaluate the proposed Subcontractor's ability to perform the Work. If the Agency approves the Contractor's request to subcontract, the Agency will provide its consent to the Contractor's request as follows:

- If the subcontractor is not providing any of the insurance coverages as permitted under 00170.70(a), the Agency will respond within 7 Calendar Days after the Engineer's receipt of the request.
- If the subcontractor is providing any of the insurance coverages as permitted under 00170.70(a), the Agency will respond within 35 Calendar Days after the Engineer's receipt of the request. (28 Calendar Days for the Agency to review and approve the Certificates of Insurance required by 00170.70(f) plus 7 Calendar Days to review and approve the subcontract request.)

(b) Submittal of Requests - The Contractor must submit requests for consent to subcontract any portion of the Contract, at any tier, on the Agency's form, available from the Engineer. The Contractor shall attach a duplicate original subcontract agreement. The Contractor must also submit in writing any amendments or modifications proposed to Agency-approved subcontract agreements, at any tier, before the affected Work begins. The Agency's written consent will be required before such amendments or modifications become effective.

(c) Substitution of Disclosed Subcontractors - The Contractor may only substitute a previously undisclosed first-tier Subcontractor according to the provisions of ORS 279C.585. The Contractor shall provide the Engineer with a written notification that identifies the name of the proposed new Subcontractor and the reason for the substitution. Authorized reasons for substitution are limited to the following circumstances (see ORS 279C.585(1) through ORS 279C.585(10)):

- The disclosed Subcontractor fails or refuses to execute a written contract that is reasonably based either upon the Project Plans and Specifications, or the terms of the Subcontractor's written Bid, after having had a reasonable opportunity to do so;
- The disclosed Subcontractor becomes bankrupt or insolvent;
- The disclosed Subcontractor fails or refuses to perform the contract;
- The disclosed Subcontractor fails or refuses to meet the bond requirements of the prime Contractor that had been identified prior to the Bid submittal;
- The Contractor demonstrates to the Agency that the Subcontractor was disclosed as the result of an inadvertent clerical error;
- The disclosed Subcontractor does not hold a license from the Construction Contractors Board and is required to be licensed by the board;
- The Contractor determines that the Work performed by the disclosed Subcontractor is not in substantial compliance with the Plans and Specifications, or that the Subcontractor is substantially delaying or disrupting the progress of the Work;
- The disclosed Subcontractor is ineligible to work on a public improvement according to the applicable statutory provisions;
- The substitution is for "good cause" as defined by State Construction Contractors Board rule; or
- The substitution is reasonably based on the Contract alternates chosen by the Agency.

(d) Terms of Subcontracts - Subcontracts shall provide that work performed under the subcontract shall be conducted and performed according to the terms of the Contract. All subcontracts, including Contractor's with the first-tier Subcontractors and those of the first-tier Subcontractors with their subcontractors, and any other lower tier subcontracts shall contain a clause or condition that if the Contractor or a Subcontractor fails, neglects, or refuses to make payment to an Entity furnishing labor or Materials in connection with the Contract, the Entity may file a complaint with the Construction Contractors Board, unless payment is subject to a good-faith dispute as defined in ORS 279C.580. Additionally, according to the provisions of ORS 279C.580, subcontracts shall include:

(1) A payment clause that obligates the Contractor to pay the first-tier Subcontractor for satisfactory performance under its subcontract within ten Calendar Days of the Contractor's receipt of payment from the Agency for the subcontracted Work.

(2) An interest clause that obligates the Contractor, if payment is not made within 30 days after receipt of payment from the Agency, to pay to the first -tier Subcontractor interest on amounts due in the case of each payment not made according to the payment clause included in the subcontract according to paragraph (1) of this Subsection. A Contractor or first-tier Subcontractor shall not be obligated to pay interest if the only reason that the Contractor or first-tier Subcontractor did not make payment when payment was due is that the Contractor or first-tier Subcontractor did not receive payment from the Agency or

Contractor when payment was due. The interest shall be for the period beginning on the day after the required payment date and ending on the date on which payment of the amount due is made; and shall be computed at the rate specified in 00170.10©.

(3) A provision requiring the first-tier Subcontractor to include a payment clause and an interest clause conforming to the standards of ORS 279C.580 (see 00180.21(d1) and 00180.21(d-2)) in each of its subcontracts, and to require each of its subcontractors to include such clauses in their subcontracts with each lower-tier subcontractor or Materials supplier. This payment clause shall require the Contractor to return all retainage withheld from the Subcontractor, whether held by the Contractor or the Agency, as specified in 00195.50(d).

As required by ORS 279C.800 through 279C.870, subcontracts shall include:

- A provision requiring the subcontractor to have a public works bond filed with the Construction Contractors Board before starting Work on the Project, unless exempt.
- A provision requiring that the workers shall be paid not less than the specified minimum hourly rate of wage.

(e) Contractor's Responsibilities - As a condition of the Agency's grant of consent to subcontract, whether or not stated in the subcontract agreement itself, the Contractor shall remain solely responsible for administration of the subcontract, including but not limited to:

- Performance of subcontracted Work;
- Progress of subcontracted Work;
- Payments for accepted subcontracted Work; and
- Disputes and claims for additional compensation regarding subcontracted Work.

The Engineer's consent to subcontract will not create a contract between the Agency and the Subcontractor, will not convey to the Subcontractor any rights against the Agency, and will not relieve the Contractor or the Contractor's Surety of any of their responsibilities under the Contract.

(f) Failure to Comply - Failure to comply with 00180.21 will be cause for the Engineer to take action reasonably necessary to obtain compliance. This action may include, but is not limited to:

- Suspension of the Work;
- Withholding of Contract payments as necessary to protect the Agency; and Termination of the Contract.

00180.22 Payments to Subcontractors and Agents of the Contractor

To the extent practicable, the Contractor shall pay in the same units and on the same basis of measurement as listed in the Schedule of Items for subcontracted Work or other Work not done by the Contractor's own organization. In making payment to Subcontractors and to its other agents performing Work and furnishing Materials and Equipment to be incorporated into the Work, the Contractor shall assume all losses resulting from overpayment.

If requested, the Engineer will make estimates of the Work quantities performed by Subcontractors or by others on the Project, and of Materials eligible for advances on Materials in the progress payments. These estimates are approximate only, and will be made in units of measure as listed in the Schedule of Items. The Agency does not guarantee the accuracy of these estimates, and an incorrect estimate will not bind the Agency in final settlement.

If requested in writing by a first-tier Subcontractor, the Contractor shall send to the Subcontractor, within ten Calendar Days of receiving the request, a copy of that portion of any invoice or request for payment submitted to the Agency, or pay document provided by the Agency to the Contractor, specifically related to any labor, Equipment, or Materials supplied by the first-tier Subcontractor.

00180.30 Materials, Equipment, and Work Force

The Contractor shall furnish suitable and sufficient Materials, Equipment, and personnel to properly prosecute the Work. The Contractor shall use only Equipment of adequate size and condition to meet the requirements of the Work and Specifications, and to produce a satisfactory quality of Work. Upon receipt of the Engineer's written order, the Contractor shall immediately remove, and not use again on the Project without the Engineer's prior written approval, Equipment that, in the Engineer's opinion, fails to meet Specifications or produce a satisfactory product or result.

The work force shall be trained and experienced for the Work to be performed. Upon receipt of the Engineer's written order, the Contractor shall immediately remove from the Project Site, and shall not employ again on the Project without the Engineer's prior written approval, any supervisor or employee of the Contractor or its Subcontractors who, in the Engineer's opinion, does not perform satisfactory Work or whose conduct interferes with the progress of the Work. If the Contractor fails to remove Equipment or persons as ordered, or fails to furnish suitable and sufficient Materials, Equipment and personnel for the proper prosecution of the Work, the Engineer may suspend the Work by written notice until such orders are complied with and such deficiencies are corrected, or the Engineer may terminate the Contract under the provisions of 00180.90(a).

00180.31 Required Materials, Equipment, and Methods

The Engineer's decisions under this Section are final.

(a) General - When the Equipment and methods to be used are not specified in the Contract, any Equipment or methods that accomplish the Work as required by the Contract will be permitted. When the Contract specifies certain Equipment or methods, the Contractor shall use the Equipment or methods specified unless otherwise authorized by the Engineer in writing.

(b) Substitution of Materials and Equipment to be Incorporated into the Work - After execution of the Contract, the Engineer will approve substitution of Materials and Equipment to be incorporated into the Work as follows:

(1) Reasons for Substitution - The Engineer will consider substitution only if:

- The proposed Materials or Equipment are equal to or superior to the specified items in construction, efficiency and utility; or

- Due to reasons beyond the control of the Contractor, the specified Materials or Equipment cannot be delivered to the Project in sufficient time to complete the Work in proper sequence.

(2) Submittal of Request - The Contractor shall submit requests for substitution to the Engineer, including manufacturers' brochures and other information needed to verify equality of the proposed item(s).

(c) Substitution of Equipment Specified to Perform Work - The Agency encourages development of new or improved Equipment and innovative use of Equipment. When the Specifications require Equipment of a particular size or type to be used to perform certain portions of the Work, the Contractor may submit a request to the Engineer to use Equipment of a different size or type. The request will not be considered as a cost reduction proposal under 00140.70. The request shall:

- Be in writing and include a full description of the Equipment proposed and its intended use;
- Include the reasons for requesting the substitution; and
- Include evidence, obtained at the Contractor's expense and satisfactory to the Engineer, that the proposed Equipment is capable of functioning as well as or better than the specified Equipment.

The Engineer will consider the Contractor's request and will provide a written response to the Contractor, either permitting or denying use of the proposed Equipment. Permission may be granted on a trial basis to test the quality of Work actually produced, subject to the following:

- There will be no cost to the Agency, either in Contract Amount or in Contract Time;
- The permission may be withdrawn by the Engineer at any time if, in the Engineer's opinion, the Equipment is not performing in all respects equivalent to the Equipment specified in the Contract;
- If permission is withdrawn, the Contractor shall perform the remaining Work with the originally-specified Equipment; and
- The Contractor shall remove and replace nonspecification Work resulting from the use of the Contractor's proposed Equipment, or otherwise correct it as the Engineer directs, at no additional compensation.

(d) Substitution of Methods - The Agency encourages development of new, improved, and innovative construction methods. When the Plans or Specifications require a certain construction method for a portion of the Work, the Contractor may submit a request for a change by following the provisions of 00140.70, "Cost Reduction Proposals".

00180.32 Alternative Materials, Equipment, and Methods

Whenever the Contract authorizes certain alternative Materials, Equipment, or methods of construction for the Contractor's use to perform portions of the Work, and leaves the selection to the Contractor, the Agency does not guarantee that all listed alternative Materials, Equipment, or methods of construction can be used successfully throughout all or any part of the Work.

The Contractor shall employ only those alternatives that can be used to satisfactorily perform the Work. No additional compensation will be paid for corrective work necessitated by the Contractor's use of an inappropriate alternative.

00180.40 Limitation of Operations

(a) In General - The Contractor shall comply with all Contract provisions and shall:

- Not begin Work that may allow damage to Work already started.

(b) On-Site Work - The Contractor shall not begin On-Site Work until the Contractor has:

- Received Notice to Proceed;
- Filed with the Construction Contractors Board the public works bond as required in 00170.20;
- An approved Project Work schedule;
- Met with the Engineer at the required preconstruction conference; and
- Assembled all Materials, Equipment, and labor on the Project Site, or has reasonably assured that they will arrive on the Project Site, so the Work can proceed according to the Project Work schedule.

00180.41 Project Work Schedules

The Contractor shall submit a Project Work schedule to the Engineer. The Project Work schedule is intended to identify the sequencing of activities and time required for prosecution of the Work. The schedule is used to plan, coordinate, and control the progress of construction. Therefore, the Project Work schedule shall provide for orderly, timely, and efficient prosecution of the Work, and shall contain sufficient detail to enable both the Contractor and the Engineer to plan, coordinate, analyze, document, and control their respective Contract responsibilities. Sufficient detail shall also include all required double shifts, overtime work, or combination of both necessary to complete Contract Work within the Contract Time. Contractor's activity related to developing, furnishing, monitoring, and updating these required schedules is Incidental.

(1) Review and Reporting - The Project Work schedule may require revision as the Work progresses. Therefore, the Contractor shall monitor and when necessary revise the Project Work schedule as follows:

Review with the Engineer - The Contractor shall perform ongoing review of the Project Work schedule and progress of the Work with the Engineer. If the Engineer or the Contractor determines that the Project Work schedule no longer represents the Contractor's own plans or expected time for the Work, a meeting shall be held between the Engineer and the Contractor. At this meeting, the Contractor and the Engineer shall review Project events and any changes for their effect on the Project Work schedule. After any necessary action has been agreed upon, the Contractor shall make required changes to the Project Work schedule. The Contractor shall collect information on all activities worked on or scheduled to be worked on during the previous report period, including shop drawings, Material procurement, and Contract Change Orders that have been issued. Information shall include

commencement and completion dates on activities started or completed, or if still in progress, the remaining time duration.

Schedules Do Not Constitute Notice - Submittal of a Project Work schedule, with supporting Project narrative, does not constitute or substitute for any notice the Contractor is required under the terms of the Contract to give the Agency.

Failure to Provide Schedule - The Project Work schedule is essential to the Agency. The Contractor's failure to provide the schedule, schedule information, progress reports, Project narratives, or schedule updates when required will be cause to suspend the Work, or to withhold Contract payments as necessary to protect the Agency, until the Contractor provides the required information to the Engineer.

00180.42 Preconstruction Conference

Unless otherwise approved in writing by the Engineer, before any Work is performed and within 5 Calendar Days of the Notice to Proceed, the Contractor shall meet with the Engineer for a preconstruction conference at a time mutually agreed upon.

00180.43 Commencement and Performance of Work

From the time of commencement of the Work to the time of Final Acceptance the Contractor shall:

Provide adequate Materials, Equipment, labor, and supervision to perform the Work;

Perform the Work as vigorously and as continuously as conditions permit, and according to a Project Work schedule that ensures completion within the Contract Time or the adjusted Contract Time;

Not voluntarily suspend or slow down operations without prior written approval from the Engineer; and

Not resume suspended Work without the Engineer's written authorization.

00180.50 Contract Time to Complete Work

(a) General - The time allowed to complete the Work or Pay Item is stipulated in the Solicitation Documents, and will be known as the "Contract Time". (see 00110.20)

(b) Kinds of Contract Time - The Contract Time will be expressed in one or more of the following ways:

(1) Fixed Date Calculation - The calendar date on which the Work or Pay Item shall be completed; or

(2) Calendar Day Calculation - The number of Calendar Days from a specified beginning point in which the Work or Pay Item shall be completed.

(c) Beginning of Contract Time - When the Contract Time is stated in Calendar Days, counting of Contract Calendar Days will begin with the fifteenth Calendar Day following the date of the Notice to Proceed.

(d) Recording Contract Time - All Contract Time will be recorded and charged to the nearest Day.

On Contracts with Calendar Day counts, the Engineer will furnish the Contractor a monthly statement of Contract Time charges. The statement will show the number of Calendar Days counted for the preceding month and the number of Calendar Days remaining prior to the established completion date for that Pay Item.

For Contracts with fixed completion dates for Pay Items, the Engineer will furnish the Contractor a weekly statement of Contract Time charges only after expiration of the Contract Time. The statement will show the number of Calendar Days of liquidated damages that have been assessed, if any. These statements will include any exclusions from, or adjustments to, Contract Time.

(e) Exclusions from Contract Time - Regardless of the way Contract Time is expressed in the Contract, certain Calendar Days will not be charged against Contract Time. These exclusions will be allowed when the Contractor is prevented from performing Work due to one of the following reasons, resulting in delay:

- Acts of God or Nature;
- Court orders enjoining prosecution of the Work;
- Strikes, labor disputes or freight embargoes that, despite the Contractor's reasonable efforts to avoid them, cause a shutdown of the entire Project or one or more major operations. "Strike" and "labor dispute" may include union action against the Contractor, a Subcontractor, a Materials supplier, or the Agency; or
- Suspension of the Work by written order of the Engineer for reasons other than the Contractor's failure or neglect.

(f) Time Calculation Protest - In the event the Contractor disputes the accuracy of the statement of Contract Time charges, it shall immediately contact the Engineer and attempt to resolve the dispute. If the dispute cannot be resolved informally, the Contractor shall submit a formal written protest to the Engineer within seven Calendar Days of the date the Engineer mailed or delivered the statement. Failure to submit a formal written protest within the seven Calendar Day period constitutes the Contractor's approval of the time charges, or adjusted time charges, itemized in the statement.

(g) End of Contract Time - When the Engineer determines that the On-Site Work has been completed, except for the items listed below; the Engineer will issue a Notice of Substantial Completion.

The Notification will list:

- The date the time charges stopped;
- Final trimming and cleanup tasks (see 00140.90);
- Equipment to be removed from the Project Site;
- Minor corrective work not involving additional payment to be completed; and

- Submittals, including without limitation all required certifications, bills, forms, warranties, certificate of insurance coverage (00170.70(b)), and other documents, required to be provided to the Engineer before Final Acceptance is issued.

The Contractor shall complete all tasks listed in the Notice of Substantial Completion in an expeditious manner within the time frame proposed by the Contractor and accepted by the Engineer. Unless otherwise agreed by the Agency, failure of the Contractor to complete all tasks listed in the Notification within the time frame accepted, will result in the Agency rescinding the Notice of Substantial Completion. Counting of time charges will resume upon expiration of the accepted time frame.

00180.60 Notice of Delay

The Contractor shall notify the Engineer of any delay that will likely prevent completion of the Work or a Pay Item by the date specified in the Project Work schedule. The notice shall be in writing and shall be submitted within seven Calendar Days of when the Contractor knew or should have known of the delay. The notice shall include, to the extent available, the following:

- The reasons or causes for the delay;
- The estimated duration of the delay and the estimated resulting cumulative delay in Contract completion;
- Except for 00180.50(e) and 00180.65 delays, whether or not the Contractor expects to request an adjustment of Contract Time due to the delay;
- Whether or not the Contractor expects to accelerate due to the delay; and
- Whether or not the Contractor expects to request additional compensation due to the delay.

Except for 00185.50(e) and 00180.65 delays, failure to include this information will constitute waiver of the Contractor's right to later make such a request.

00180.70 Suspension of Work

(a) General - The Engineer has authority to suspend the Work, or part of the Work, for any of the following causes:

- Failure of the Contractor to correct unsafe conditions;
- Failure of the Contractor to carry out any provision of the Contract;
- Failure of the Contractor to carry out orders issued by the Engineer, the Agency, or any regulatory authority;
- Existence of conditions unsuitable to proper or safe performance of the Work; or
- Any reason considered by the Agency to be in the public interest.

When Work has been suspended for any reason, the Contractor shall not resume work without the Engineer's written authorization.

(b) Contractor's Responsibilities during and after Suspension - During periods of suspension of the Work, the Contractor shall continue to be responsible for protecting and repairing the Work according to 00170.80, and for ensuring that a single

designated representative responsible for the Project remains available according to 00150.40(b).

When Work is resumed after suspension, unless otherwise specified in the Contract, the Contractor shall perform the following at no additional compensation:

- Replace or repair any Work, Materials, and Equipment to be incorporated into the Work that was lost or damaged because of the temporary use of the Project Site by the public; and
- Remove Materials, Equipment, and temporary construction necessitated by temporary maintenance during the suspension, as directed by the Engineer.

(c) Compensation and Allowances for Suspension - Compensation and allowance of additional Contract Time due to suspension of any portion of the Work will be authorized only for Agency initiated suspensions for reasons other than the Contractor's failure or neglect. (refer to 00180.50(e), 00180.65, and 00195.40)

00180.80 Adjustment of Contract Time

(a) General - Contract Time established for the Work will be subject to adjustment, either by increase or decrease, for causes beyond the control of the Contractor, according to the terms of this Subsection. After adjustment, the Contract Time will become, and be designated as, the "Adjusted Contract Time". Except as provided in 00180.65 and 00195.40, an adjustment of Contract Time shall be the Contractor's only remedy for any delay arising from causes beyond the control of the Contractor.

(b) Contractor's Request Not Required - The Engineer may increase or decrease the Contract Time or the Adjusted Contract Time if Change Orders or Extra Work orders issued actually increase or decrease the amount of time required to perform the Work. The Engineer may also increase Contract Time for delays due to causes beyond the Contractor's control specified in 00180.50(e). The Engineer will promptly inform the Contractor of adjustments made to Contract Time according to this Subsection, and will include the reasons for adjustment.

If the Agency anticipates delay during performance of the Contract, and specifies its expected duration in the Special Provisions, the Engineer will only consider additional delay beyond the stipulated duration in determining whether to adjust Contract Time.

(c) Contractor's Request Required - In the event the Contractor believes that additional Contract Time is due, the Contractor shall submit to the Engineer a timely request for adjustment of Contract Time. The Engineer will not consider untimely requests. The Agency regards as timely only those requests for adjustment of Contract Time that:

- Accompany a proposed revised Project Work schedule submitted according to 00180.41, for comparison with the last revision of the Project Work schedule; or
- Are not otherwise deemed waived and are submitted within 15 Days after the date of Second Notification, if Second Notification has been issued.

The Engineer will not grant an adjustment of Contract Time for events that occurred prior to the date of the last revision of the Project Work schedule. The Engineer will

not authorize, nor the Agency pay, acceleration costs incurred by the Contractor prior to its submittal of a request for adjustment of Contract Time to which the acceleration costs relate.

The Contractor's request for adjustment of Contract Time shall be submitted to the Engineer on a form provided by, or in a format acceptable to, the Engineer, and shall include a copy of the written notice required under 00180.60. The request shall include without limitation:

- Consent of the Contractor's Surety if the request totals more than 30 Calendar Days of additional Contract Time;
- Sufficient detail for the Engineer to evaluate the asserted justification for the amount of additional Contract Time requested;
- The cause of each delay for which additional Contract Time is requested, together with supporting analysis and data;
- Reference to the Contract provision allowing Contract Time adjustment for each cause of delay;
- The actual or expected duration of delay resulting from each cause of delay, expressed in Calendar Days; and
- A schedule analysis based on the current approved Project Work schedule for each cause of delay, indicating which activities are involved and their impact on Contract completion.

(d) Bases for Adjustment of Contract Time - In the adjustment of Contract Time, the Engineer will consider causes that include, but are not limited to:

- Failure of the Agency to submit the Contract and bond forms to the Contractor for execution within the time stated in 00130.50, or to submit the Notice to Proceed within the time stated in 00130.90;
- Errors, changes, or omissions in the Supplemental Drawings, quantities, or Specifications;
- Performance of Extra Work;
- Failure of the Agency or Entities acting for the Agency to act promptly in carrying out Contract duties and obligations;
- Acts or omissions of the Agency or Entities acting for the Agency that result in unreasonable delay referenced in 00195.40;
- Causes cited in 00180.50(e); and
- Right-of-way and access delays referenced in 00180.65.

The Engineer will not consider requests for adjustment of Contract Time based on any of the following:

- Contentions that insufficient Contract Time was originally specified in the Contract;
- Delays that do not affect the specified or Adjusted Contract Time;
- Delays that affect the Contractor's planned early completion, but that do not affect the specified or adjusted Contract Time;

- Shortage or inadequacy of Materials, Equipment or labor;
- Late delivery of Materials and Equipment to be incorporated into the Work, except under those conditions referenced in 00180.50(e);
- Substitution of Equipment in 00180.31(c);
- Reasonably predictable weather conditions; or
- Other matters within the Contractor's control or Contract responsibility.

(e) Consideration and Response by Agency - The Engineer will only consider a Contractor's request for Contract Time adjustment submitted according to the requirements of 00180.80©. The Engineer may elect not to consider claimed delays that do not affect the specified or adjusted Contract Time required to complete the Work.

The Engineer may adjust Contract Time for causes not specifically identified by the Contractor in its request.

The Engineer will review a properly submitted request for Contract Time adjustment, and within a reasonable time will advise the Contractor of the Engineer's findings. If the Contractor disagrees with the Engineer's findings, the Contractor may request review according to the procedure specified in 00199.40.

00180.85 Failure to Complete on Time; Liquidated Damages

(a) Time is of the Essence - Time is of the essence in the Contractor's performance of the Contract. Delays in the Contractor's performance of the Work may inconvenience the traveling public, interfere with business and commerce, and increase cost to the Agency. It is essential and in the public interest that the Contractor prosecute the Work vigorously to Contract completion.

The Agency does not waive any rights under the Contract by permitting the Contractor to continue to perform the Contract, or any part of it, after the Contract Time or adjusted Contract Time has expired.

(b) Liquidated Damages - The Agency will sustain damage if the Work is not completed within the specified Contract Time. However, in certain Agency projects it may be unduly burdensome and difficult to demonstrate the exact dollar value of such damages. The Agency will identify such projects in the Special Provisions related to them. In these projects, the Contractor agrees to pay to the Agency, not as a penalty but as liquidated damages, the amount specified in the Special Provisions for each Calendar Day the Contractor expends performing the Contract in excess of the Contract Time or adjusted Contract Time.

Payment by the Contractor of liquidated damages does not release the Contractor from its obligation to fully and timely perform the Contract according to its terms. Nor does acceptance of liquidated damages by the Agency constitute a waiver of the Agency's right to collect any additional damages it may sustain by reason of the Contractor's failure to fully perform the Contract according to its terms. The liquidated damages shall constitute payment in full only of damages incurred by the Agency due to the Contractor's failure to complete the Work on time.

If the Contract is terminated according to 00180.90(a), and if the Work has not been completed by other means on or before the expiration of Contract Time or adjusted Contract Time, liquidated damages will be assessed against the Contractor for the duration of time reasonably required to complete the Work.

00180.90 Termination of Contract and Substituted Performance

(a) Termination for Default - Termination of the Contract for default may result if the Contractor:

- Violates any material provision of the Contract;
- Disregards applicable laws and regulations or the Engineer's instructions;
- Refuses or fails to supply enough Materials, Equipment or skilled workers for prosecution of the Work in compliance with the Contract;
- Fails to make prompt payment to Subcontractors;
- Makes an unauthorized general assignment for the benefit of the Contractor's creditors;
- Has a receiver appointed because of the Contractor's insolvency;
- Is adjudged bankrupt and the court consents to the Contract termination; or
- Otherwise fails or refuses to faithfully perform the Contract according to its terms and conditions.

If the Contract is terminated by the Agency, upon demand the Contractor and the Contractor's Surety shall provide the Engineer with immediate and peaceful possession of the Project Site, and of all Materials and Equipment to be incorporated into the Work, whether located on and off the Project Site, for which the Contractor received progress payments under 00195.50.

If the Contract is terminated for default, neither the Contractor nor its Surety shall be:

- Relieved of liability for damages or losses suffered by the Agency because of the Contractor's breach of Contract; or
- Entitled to receive any further progress payments until the Work is completed. However, progress payments for completed Work that remain due and owing at the time of Contract termination may be made according to the terms of 00195.50, except that the Engineer will be entitled to withhold sufficient funds to cover costs incurred by the Agency as a result of the termination. Final payment to the Contractor will be made according to the provisions of Section 00195.

If a termination under this provision is determined by a court of competent jurisdiction to be unjustified, the termination shall be deemed a termination for public convenience.

(b) Substituted Performance - According to the Agency's procedures, and upon the Engineer's recommendation that sufficient cause exists, the Agency, without prejudice to any of its other rights or remedies and after giving the Contractor and the Contractor's Surety 10 Calendar Days' written notice, may:

- Terminate the Contract;

- Substitute the Contractor with another Entity to complete the Contract;
- Take possession of the Project Site;
- Take possession of Materials on the Project Site;
- Take possession of Materials not on the Project Site, for which the Contractor received progress payments under 00195.50;
- Take possession of Equipment on the Project Site that is to be incorporated into the Work;
- Take possession of Equipment not on the Project Site that is to be incorporated into the Work, and for which the Contractor received progress payments under 00195.50; and
- Finish the Work by whatever method the Agency deems expedient.

If, within the 10 Calendar Day notice period provided above, the Contractor and/or its Surety corrects the basis for declaration of default to the satisfaction of the Engineer, or if the Contractor's Surety submits a proposal for correction that is acceptable to the Engineer, the Contract will not be terminated.

(c) Termination for Public Convenience - The Engineer may terminate the Contract in whole or in part whenever the Engineer determines that termination of the Contract is in the best interest of the public.

The Engineer will provide the Contractor and the Contractor's Surety seven Calendar Days' written notice of termination for public convenience. After such notice, the Contractor and the Contractor's Surety shall provide the Engineer with immediate and peaceful possession of the Project Site, and of Materials and Equipment to be incorporated into the Work, whether located on and off the Project Site, for which the Contractor received progress payments under 00195.50. Compensation for Work terminated by the Engineer under this provision will be determined according to the provisions of 00195.70(b).

Section 00190 - Measurement of Pay Quantities

Description

Lump Sum Basis - Lump sum, when used, means the Work described shall be completed and accepted without measurement unless changes are ordered in writing by the Engineer. If estimated quantities of the Work to be performed are listed in the Special Provisions, they provide only a basis for adjusting payment amounts. Estimated quantities are approximate only, and are made from a reasonable interpretation of the Plans and Specifications. Computations based on the details and dimensions shown on the Plans or Specifications are not guaranteed to equal estimated quantities. If the Agency issues no Change Order, the Agency will make no pay adjustment for quantities based on the Contractor's computations that overrun or underrun the estimated quantities. If the Agency issues Change Orders for changes in the Work, the Engineer will measure such changes according to the standards set by 00195.20 to determine adjustment of payment.

00190.00 Scope - The Engineer will measure pay quantities for accepted Work according to the United States standard measure unless otherwise provided in the Contract. Unless otherwise specified in the Contract, the Engineer will round off all quantity computations using the following convention:

- The final significant digit will not be changed when the succeeding digit is less than 5.
- The final significant digit will be increased by one when the succeeding digit is 5 or greater.

The measurement provisions contained in the Specifications for each Pay Item will supplement or modify the above convention by:

- Imposing measurement limitations
- Describing measurement or computation procedures
- Giving conversion factors or adjustment conditions
- Providing for determination of reasonably accurate and representative Pay Item quantities

Measurements required or allowed to be made by the Contractor will be subject to the Engineer's verification. The Engineer's decision about measurement is final.

00190.10 Measurement Guidelines - Measurement of quantities will be made on the following bases, unless otherwise specified in the Contract:

(a) **Unit Basis** - Unit will be each, unless otherwise specified in the Contract and will be determined by actual count of units in place.

(b) **Length Basis** - Length will be feet or mile, unless otherwise specified in the Contract and will be determined by measuring the length at least to the nearest 0.1 foot or at least to the nearest 0.1 mile, as applicable, unless otherwise specified in the Contract. Measurements will be limited to the dimensions shown or specified, or as directed by the Engineer.

(c) **Area Basis** - Area will be square foot, square yard, or acre, unless otherwise specified in the Contract and will be determined by measuring the width and the length (or height) at least to the nearest 0.1 foot and computed at least to the nearest 0.1 square foot, nearest 0.1 square yard, or nearest 0.1 acre, as applicable, unless otherwise specified in the Contract.

(d) **Weight Basis** - Weight will be pound or ton, unless otherwise specified in the Contract and will be determined as follows:

(1) **Pound** - Pound weight will be determined by the net weight identified on the manufacturer's packaged labels, subject to periodic check weighing. Weight by pound will be measured at least to the nearest 1.0 pound unless otherwise specified in the Contract.

Provide a certificate with each shipment together with a certified copy of the weight of each delivery. If the check weight is less than the manufacturer weight by more than 0.4%, the discrepancy will be resolved by the Engineer.

(2) **Ton** - Ton weight will be determined on Contractor-provided scales as required under 00190.20 unless otherwise allowed by the Specifications. Weight by ton will be measured at least to the nearest 0.01 ton unless otherwise specified in the Contract.

If bituminous materials, portland cement, lime, and similar bulk Materials are shipped by truck or rail, the supplier's shipping invoice with net scale weights, or volumes converted to weights, may be used for Pay Item quantity determination in place of weights determined on the Contractor-provided vehicle scales.

Shipping invoice weights of the supplier's truck or transport shall be subject to periodic check weighing on the Contractor's vehicle scales, or other scales designated, according to 00190.20. If the check weight is less than the supplier weight by more than 0.4%, the discrepancy will be resolved by the Engineer.

No payment will be made:

- For quantities in excess of the supplier weight
- When Materials have been lost, wasted, or otherwise not incorporated into the Work
- For additional hauling costs resulting from the check weighing

(e) Volume Basis - Volume will be cubic yard truck measure or in-place measure,

gallons, foot board measure (FBM), or thousand foot board measure (MFBM), unless otherwise specified in the Contract and will be measured at least to the nearest 0.1 cubic yard, nearest 1.0 gallon, nearest 0.1 FBM, or nearest 0.1 MFBM, as applicable, unless otherwise specified in the Contract.

Truck measure will be the measured and calculated maximum "water level" capacity of the vehicle. Quantities will be determined at the point of delivery, with no allowance for settlement of Material during transit. When required to facilitate measurement, the vehicle load shall be leveled at the point of delivery. Payment will not be made for Material in excess of the maximum "water level" capacity. Deductions will be made for loads below the maximum "water level" capacity.

When bituminous materials are measured by volume, the volume will be measured at 60°F or will be corrected to the volume at 60°F using the correction factors found in the MFTP (ODOT TM 321).

If the Agency issues no Change Order, the Agency will make no pay adjustment for quantities based on the Contractor's computations that overrun or underrun the estimated quantities.

If the Agency issues Change Orders for changes in the Work, the Engineer will measure such changes according to the standards set by 00195.20 to determine adjustment of payment.

Section 00195 - Payment

Description

00195.00 Scope and Limit

(a) General - The Agency will pay only for items incorporated into the Work or performed according to the terms of the Contract. Payment constitutes full compensation to the Contractor for furnishing all Materials, Equipment, labor, and Incidentals necessary to complete the Work; and for risk, loss, damage, and expense arising from the nature or prosecution of the Work or from the action of the elements, subject to the provisions of 00170.80. The Contractor shall include the costs of bonds and insurance for the Project in the unit price for each Pay Item of Work to be performed.

(b) Essential or Incidental Materials or Work - When the Specifications state that the unit price for a Pay Item is compensation for certain Materials or Work essential or Incidental to the Pay Item, the same Materials or Work will not be measured or paid under any other Pay Item.

Provisions and Requirements

00195.20 Changes to Plans or Character of Work

(a) Insignificant Changed Work - If the changes made under 00140.30 do not significantly change the character or unit cost of the Work to be performed under the Contract, the Agency will pay for such work at the Pay Item price.

If the Work involved in the change is measured on a lump sum basis and its character is not significantly changed, payment for the Changed Work will be determined:

- As described in the applicable Section of the Specifications;
- If not described there, on a theoretical unit price determined by dividing the Contractor's lump sum price by the estimated quantity of the Pay Item listed in the Special Provisions; or
- If neither of the above applies, the Engineer will make an equitable adjustment.

(b) Significant Changed Work - If the changes made under 00140.30 significantly alter the character, unit cost, or lump sum cost of the Work, the Agency will adjust the Contract. Adjustments will exclude any loss of anticipated profits. The parties shall agree upon the basis for payment and the amount of adjustment prior to the Contractor commencing the Changed Work. If the basis and amount cannot be agreed upon, the Engineer will make an equitable adjustment, which may increase or decrease the Contract Amount and Contract Time.

Any such adjustments will not be more than the amount justified by the Engineer on the basis of the established procedures set out in Section 00197 for determining rates.

The term "Significant Changed Work" shall apply only to that circumstance in which the character of the Work, as changed, differs materially in kind, nature, or unit cost from that involved or included in the originally proposed construction.

00195.30 Differing Site Conditions

Upon written notification, as required in 00140.40, the Engineer will investigate the identified conditions. If the Engineer determines that the conditions materially differ and cause an increase or decrease in the cost or time required to perform any Work under the Contract, an adjustment in the Contract Amount or Contract Time, excluding loss of anticipated profits, will be made, and the Contract modified accordingly, in writing. The Engineer will notify the Contractor as to whether or not an adjustment of the Contract is warranted.

No Contract adjustment which benefits the Contractor will be allowed unless the Contractor has provided the required written notice.

00195.40 Unreasonable Delay by the Agency

If the Contractor believes that performance of all or any portion of the Work is suspended, delayed, or interrupted for an unreasonable period of time in excess of that originally anticipated or customary in the construction industry, due to acts or omissions of the Agency, or persons acting for the Agency, and that additional compensation, Contract Time, or both, are due the Contractor because of the suspension, delay or interruption, the Contractor shall immediately file a written notice of delay according to 00180.60. The Contractor shall then promptly submit a properly supported request for any additional compensation, Contract Time, or both, according to the applicable provisions in 00180.60 through 00180.80 and Section 00199.

The Engineer will promptly evaluate a properly submitted request for additional compensation. If the Engineer determines that the delay was unreasonable, and that the cost required for the Contractor to perform the Contract has increased as a result of the unreasonable suspension, delay or interruption, the Engineer will make an equitable adjustment, excluding profit, and modify the Contract in writing accordingly. The Engineer will notify the Contractor of the determination and whether an adjustment to the Contract is warranted.

Under this provision, no Contract adjustment will be allowed:

- Unless the Contractor has provided the written notice required by 00180.60;
- For costs incurred more than 10 Calendar Days before the Engineer receives the Contractor's properly submitted written request;
- For any portion of a delay that the Engineer deems to be a reasonable delay, or for which an adjustment is provided for or excluded under other terms of the Contract; or
- To the extent that performance would nevertheless have been suspended, delayed or interrupted by causes other than those described in this Subsection.

00195.50 Progress Payments and Retained Amounts

(a) Progress Payments - The Agency's payment of progress payments shall not be construed as acceptance or approval of any part of the Work, and shall not relieve the Contractor of responsibility for defective Materials or workmanship.

The estimates upon which progress payments are based are not represented to be accurate estimates. All estimated quantities are subject to correction in the final estimate. If the Contractor uses these estimates as a basis for making payments to Subcontractors, the Contractor assumes all risk and bears any losses that result.

If the estimated amount due the Contractor for any given month is less than $1,000, the Agency will make no payment for that month unless requested by the Contractor.

(1) Progress Estimates - At the same time each month, the Engineer will make an estimate of the amount and value of Pay Item Work completed. The amount of Work completed will be the sum of the estimated number of units completed for unit price Pay Items plus the estimated percentage completed of lump sum Pay Items.

The estimated value of the Work completed will then be determined by using the Contract unit price for unit price Pay Items, and by using one of the following methods to determine the value of the lump sum Pay Items:

- The "theoretical unit price", when the Special Provisions contain an estimated number of units;
- A Contractor-submitted, Engineer-approved Schedule of Values, when there is no theoretical unit price available; or
- Engineer's determination, when there is neither an available theoretical unit price, nor an approved, Contractor-submitted Schedule of Values.

The amounts to be allowed for lump sum Pay Items in progress payments will not exceed the reasonable value of the Work performed, as determined by the Engineer. Incidentals such as formwork, falsework, shoring, and cribbing shall be included in the unit prices for the various Pay Items requiring their use, unless specified as a separate Pay Item. No payment will be made for Pay Items that include Incidentals until units or portions of such Pay Item Work are in place and completed. The costs of Incidentals will be paid in proportion to the percentage of Pay Item Work completed.

(2) Value of Materials on Hand – If requested by the contractor, the Engineer will make an estimate of the amount and value of acceptable Materials on hand, i.e., already delivered and stored according to 00195.60(a), to be incorporated into the Work.

(3) Value of Work Accomplished - The sum of the values in (1) and (2) above will be collectively referred to in this Subsection as the "value of Work accomplished", subject to (4) below.

(4) Limitations on Value of Work Accomplished - In determining the "value of Work accomplished", the Engineer's estimate will be based on the unit prices for the various Pay Items. Any amounts not included in progress payments due to substantial mathematical unbalancing of Pay Item prices will be included in the final payment issued according to 00195.90(b).

(5) Reductions to Progress Payments - With each progress payment, the Contractor will receive a Contract payment voucher and summary setting forth the value of Work accomplished reduced by the following:

- Amounts previously paid;
- Amounts deductible or owed to the Agency for any cause specified in the Contract;
- Additional amounts retained to protect the Agency's interests according to Subsection (e) below.

(b) Retainage - The amount to be retained from progress payments will be 5% of the value of Work accomplished, and will be retained in one of the forms specified in Subsection (c) below. No retainage will be withheld from Work performed as Force Account Work or other items decided by the Agency.

As provided in 00170.65(a) additional retainage of 25% of amounts earned will be withheld and released according to ORS 279C.845 when the Contractor fails to file the certified statements required in ORS 279C.845, FHWA Form 1273, and 00170.65.

(c) Forms of Retainage - Forms of acceptable retainage are specified below in Subsections (1). No other forms are available under Roseburg Urban Sanitary Authority contracts.

(1) Cash, Alternate A - Retainage will be deducted from progress payments and held by the Agency until final payment is made according to 00195.90, unless otherwise specified in the Contract.

The Agency will deposit the cash retainage withheld in an interest-bearing account in a bank, trust company, or savings association for the benefit of the Agency, as provided by ORS 279C.560(4). Interest earned on the account shall accrue to the Contractor. Amounts retained and interest earned will be included in the final payment made according to 00195.90. Any retainage withheld on Work performed by a Subcontractor will be released to the Contractor according to 00195.90(d).

(d) Reduction of Retainage - As the Work progresses, the amounts to be retained under (b) of this Subsection are subject to reduction in the Engineer's sole discretion. Retainage reductions will be considered only as follows:

- When the Work is 97.5% or more completed, the Engineer may, without application by the Contractor, reduce the retained amount to 100% of the value of the Work remaining.
- When a Subcontractor has satisfactorily completed all of its Work, it may request release of retainage for that Work from the Contractor. The Contractor shall

request reduction of retainage in the amount withheld for the Subcontractor's Work after certifying to the Agency that the Subcontractor's Work is complete, and that all contractual requirements pertaining to the Subcontractor's Work have been satisfied. Within 60 Calendar Days of the end of the month in which the Agency receives the Contractor's certification regarding the Subcontractor's Work, the Agency will either notify the Contractor of any deficiencies which require completion before release of retainage, or verify that the Subcontractor's Work complies with the Contract and release all retainage for that Work with the next scheduled progress payment. Within 10 Calendar Days of receipt of retainage, the Contractor shall pay to the Subcontractor all such retainage released except for latent defects or warranty.

- The Agency will only release retainage for satisfactorily completed portions of the Work represented by Pay Items in the Schedule of Items, or by Pay Items added by Change Order. Work not represented by a Pay Item, but which constitutes part of an uncompleted Pay Item, will not be regarded as satisfactorily completed Work for the purposes of this Subsection. If retainage has been reduced or eliminated, the Agency reserves the right to protect its interests by retaining amounts from further progress payments at the rates provided in 00195.50(b).

(e) Withholding Payments - The Engineer may withhold such amounts from progress payments or final payment as may reasonably protect the Agency's interests until the Contractor has:

- Complied with all orders issued by the Engineer according to the Specifications; and
- Satisfied all legal actions filed against the Agency, the Agency's governing body and its members, and Agency employees that the Contractor is obliged to defend. (see 00170.72) Notwithstanding ORS 279C.555 or 279C.570, if a Contractor is required to file certified statements on the prevailing rate of wages, but fails to do so, the Agency will retain 25% of any amount earned as required in 00170.65.

(f) Prompt Payment Policy - Payments shall be made promptly according to ORS 279C.570.

00195.60 Advance Allowance for Materials on Hand

(a) General - If the total value of Materials on hand is at least $1,000 or the total value of a single class of Materials on hand is at least $500, the Engineer may authorize an advance allowance for the Materials in the progress payments. The Agency will not make advance allowances on the Materials unless the following three conditions are satisfied:

(1) Request for Advance Allowance - If Materials on hand meet the requirement of **(2)** below, an advance allowance will be made if:

- A written request for advance allowance for Materials on hand has been received by the Engineer at least five Calendar Days before the pay period cutoff date; and
- The request is accompanied by written consent of the Contractor's Surety.

(2) Stored or Stockpiled Conditions - The Materials shall have been delivered and/or acceptably stored or stockpiled according to the Specifications and as follows:

- At the Project Site;
- On Agency-owned property;
- On property in the State of Oregon on which the property owner has authorized storage in writing. The written authorization must allow the Agency to enter upon the property and remove Materials for at least six months after completion of the Project. The Contractor shall furnish a copy of the written permission to the Agency.

To be eligible for advance allowance, the Materials shall:

- Meet Specification requirements;
- Have the required Materials conformance and quality compliance documents on file with the Engineer (see Section 00165);
- Be in a form ready for incorporation into the Work; and
- Be clearly marked and identified as being specifically fabricated, or produced, and reserved for use on the Project.

(3) Responsibility for Protection - The Contractor has full control and responsibility for the protection of Materials on hand from the elements and against damage, loss, theft, or other impairment until the entire Project has been completed and accepted by the Agency. If Materials are damaged, lost, stolen, or otherwise impaired while stored, the monetary value advanced for them, if any, will be deducted from the next progress payment. If these conditions in 00195.60(a-1) through 00195.60(a-3) have been satisfied, the amount of advance allowance, less the retainage described in 00195.50, will be determined by one of the following methods as elected by the Engineer:

- Net cost to the Contractor of the Materials, f.o.b. the Project Site or other approved site; or
- Price (or portion of it attributable to the Materials), less the cost of incorporating the Materials into the Project, as estimated by the Engineer.

(b) Proof of Payment - The Contractor shall provide the Engineer with proof of payment to the Materials suppliers for purchased Materials within 30 Calendar Days of the date of the progress payment that includes the advance allowance.

If proof of payment is not provided, sums advanced will be deducted from future progress payments, and the Engineer will not approve further prepayment advance allowance requests.

(c) Terminated Contract - If the Contract is terminated, the Contractor shall provide the Agency immediate possession of all Materials for which advance allowances have been received, as provided above. If, for any reason, immediate possession of the Materials cannot be provided, the Contractor shall immediately refund to the Agency the total amount advanced for the Materials. The Agency may deduct any amount not so refunded from final payment.

00195.70 Payment under Terminated Contract

Payment for Work performed under a Contract that is terminated according to the provisions of 00180.90 will be determined under (a) or (b) of this Subsection.

(a) Termination for Default - Upon termination of the Contract for the Contractor's default, the Agency will make no further payment until the Project has been completed. The Agency will make progress payments to the party to whom the Contract is assigned, but may withhold an amount sufficient to cover anticipated Agency costs, as determined by the Engineer, to complete the Project. Upon completion of the Project, the Engineer will determine the total amount that the defaulting Contractor would have been entitled to receive for the Work, under the terms of the Contract, had the Contractor completed the Work (the "cost of the Work").

If the cost of the Work, less the sum of all amounts previously paid to the Contractor, exceeds the expense incurred by the Agency in completing the Work, including without limitation expense for additional managerial and administrative services, the Agency will pay the excess to the Contractor, subject to the consent of the Contractor's Surety.

If the expense incurred by the Agency in completing the Work exceeds the Contract Amount, the Contractor or the Contractor's Surety shall pay to the Agency the amount of the excess expense. The Engineer will determine the expense incurred by the Agency and the total amount of Agency damage resulting from the Contractor's default. That determination will be final as provided in 00150.00.

If a termination for default is determined by a court of competent jurisdiction to be unjustified, it shall be deemed a termination for public convenience, and payment to the Contractor will be made as provided in Subsection (b) below.

(b) Termination for Public Convenience:

(1) General - Full or partial termination of the Contract shall not relieve the Contractor of responsibility for completed portions of the Work, or relieve the Contractor's Surety of the obligation for any just claims arising from the completed Work.

(2) Mobilization - If mobilization is not a separate Pay Item, and payment is not otherwise provided for under the Contract, the Agency may pay the Contractor for mobilization expenses, including moving Equipment to and from the Project Site. If allowed, payment of mobilization expenses will be based on cost documentation submitted by the Contractor to the Engineer.

(3) All Other Work - The Agency shall pay the Contractor at the unit price for the number of Pay Item units of completed, accepted Work. For units of Pay Items partially completed, payment will be as mutually agreed, or, if not agreed, as the Engineer determines to be fair and equitable. No claim for loss of anticipated profits will be allowed. The Agency will purchase Materials left on hand according to 00195.80.

00195.80 Allowance for Materials Left on Hand

(a) Purchase of Unused Materials - If Materials are delivered to the Project Site, or otherwise acceptably stored at the order of the Engineer, but not incorporated into the Work due to complete or partial elimination of Pay Items, changes in Plans, or termination of the Contract for public convenience according to 00180.90, and it is not commercially feasible for the Contractor to return them for credit or otherwise dispose of them on the open market; the Agency may purchase them according to the formula and conditions specified in Subsection (b) below.

(b) Purchase Formula and Conditions:

(1) Formula - The Agency will apply the following formula in determining the Contractor's allowance for Materials left on hand:

Contractor's Actual Cost, plus 5% Overhead Allowance, minus Advance Allowances under 00195.60, but no markup or profit.

(2) Conditions - The Agency will not purchase the Contractor's Materials left on hand unless the Contractor satisfies the following conditions:

- Requests the Agency's purchase of unused Materials;
- Shows acquisition of the Materials according to 00160.10;
- Shows that the Materials meet Specifications; and
- Provides receipts, bills and other records of actual cost of Materials delivered to the designated delivery points.

00195.90 Final Payment

(a) Final Payment - The amount of final payment will be the difference between the total amount due the Contractor and the sum of all payments previously made. All prior partial estimates and payments shall be subject to correction in the final estimate and payment. After computation of the final amount due, and after Final Acceptance of the Project, final payment will be mailed to the Contractor's last known address as shown in the records of the Agency. Beginning 45 Calendar Days after the date of Final Acceptance, interest will begin to accrue at the rate established by ORS 279C.570 on any money due and payable to the Contractor as final payment, determined as described above. No interest will be paid on money withheld due to outstanding amounts owed by the Contractor under the provisions of 00170.10.

(b) No Waiver of Right to Make Adjustment - The fact that the Agency has made any measurement, estimate, or certification either before or after completion of the Project, Final Acceptance, Agency assumption of possession of the Project Site, or payment for any part of the Work, shall not prevent either party from:

- Showing the true amount and character of the Work;
- Showing that any measurement, estimate or certification is incorrect (except for Agency verifications under 00195.50(d));
- Recovering from the other party damages that may have been suffered because the other party failed to comply with the Contract.

00195.95 Error in Final Quantities and Amounts

(a) Request for Correction of Compensation - If the Contractor believes the amounts detailed in the final Contract payment voucher, prepared by the Engineer according to 00195.90, to be incorrect, the Contractor shall submit an itemized statement to the Engineer detailing all proposed corrections.

This statement must be submitted to the Engineer within 90 Calendar Days from the date the voucher was mailed to the Contractor, according to 00195.90(b). Any request for compensation not submitted and supported by an itemized statement within the 90 Calendar Day period will not be paid by the Agency. This does not limit the application of Section 00199.

(b) Acceptance or Rejection of Request:

(1) Consideration of Request - The Engineer will consider and investigate the Contractor's request for correction of compensation submitted according to 00195.95(a), and will promptly advise the Contractor of acceptance or rejection of the request in full or in part.

(2) Acceptance of Request - If the Engineer accepts the Contractor's request(s) in full or in part, the Engineer will prepare a post-final Contract payment voucher, including all accepted corrections, and will forward it to the Contractor.

(3) Rejection of Request - If the Engineer rejects the request(s) in full, the Engineer will issue a written notice of rejection and mail it to the Contractor.

(4) Contractor Objection to Revised Voucher or Notice of Rejection - If the Contractor disagrees with the revised voucher or notice of rejection, the Contractor may request review according to the procedure specified in 00199.40. If the Contractor fails to submit a request for 00199.40 review within 30 Calendar Days after the Engineer mails a post-final Contract payment voucher or notice of rejection, the Contractor waives all rights to a claim based on errors in quantities and amounts.

Section 00196 - Payment for Extra Work

Description

00196.00 General

Only work not included in the Contract as awarded but deemed by the Engineer to be necessary to complete the Project (see 00140.60) will be paid as Extra Work. Regardless of alterations and changes, any item of Work provided for in the Contract will not constitute Extra Work. Payment for alterations and changes to Work will be made according to 00195.20. Compensation for Extra Work will be paid only for Work authorized in writing by the Engineer and performed as specified. Work performed before issuance of the Engineer's written authorization shall be at the Contractor's risk. Extra Work will be paid as determined by the Engineer, according to 00196.10 and 00196.20.

Provisions and Requirements

00196.10 Negotiated Price

If the Engineer can reasonably determine a price estimate for Extra Work, the Engineer may then give written authorization to the Contractor to begin the Extra Work. As soon as practicable, but within 10 Calendar Days after that authorization, the Contractor shall respond in writing to the Engineer's Extra Work price estimate by submitting to the Engineer an Extra Work price quote. The price quote shall detail the following items related to the Extra Work:

- Types and amounts of Materials
- Hours of Equipment use and hours of labor
- Travel
- Overhead and profit
- Other costs associated with the proposed Extra Work

Pending approval of the price quote, the Engineer will maintain force account records of the Extra Work. As soon as practicable, but within 10 Calendar Days of receipt of a properly supported price quote, the Engineer will review the price quote and advise the Contractor if it is accepted or rejected. The Engineer will not accept a price quote that cannot be justified on a Force Account basis. If the Contractor's price is accepted, the Engineer will issue a Change Order, and the Extra Work will be paid at the accepted price.

00196.20 Force Account

If the Engineer and the Contractor cannot agree on a price for the Extra Work, the Engineer may issue a Force Account Work order requiring the Extra Work to be paid as Force Account Work. Force Account Work records and payment will be made according to Section 00197.

Section 00197 - Payment for Force Account Work

Force Account Work

00197.00 Scope

The Materials, Equipment and labor rates established in this Section apply only to Extra Work ordered by the Engineer to be performed as Force Account Work. These rates do not apply to any other Work performed under the Contract.

00197.01 General

Before ordering Force Account Work, the Engineer will discuss the proposed work with the Contractor, and will seek the Contractor's comments and advice concerning the formulation of Force Account Work specifications. The Engineer is not bound by the Contractor's comments and advice, and has final authority to:

- Determine and direct the Materials, Equipment and labor to be used on the approved Force Account Work; and
- Determine the time of the Contractor's performance of the ordered Force Account Work.

If the Engineer orders the performance of Extra Work as Force Account Work, the Engineer will record, on a daily basis, the Materials, Equipment, labor, and Special Services used for the Force Account Work during that day. The Engineer and the Contractor shall sign the record daily to indicate agreement on the Materials, Equipment, labor, and Special Services used for the Force Account Work performed on that day.

The following shall be reflected on the daily record:

- Materials used in the Force Account Work as directed by the Engineer, except those furnished and paid under rental rates for use ofEquipment;
- Equipment which the Engineer considers necessary to perform the Force Account Work.

Equipment hours will be recorded to the nearest quarter hour;

- Labor costs, including that of Equipment operators and supervisors in direct charge of the specific operations while engaged in the Force Account Work;
- Special Services; and
- The Engineer's and Contractor's signatures confirming its accuracy.

00197.10 Materials

(a) General - The Contractor will be paid for Materials actually used in the Force Account Work as directed by the Engineer, except for those furnished and paid for under rental rates included with the use of Equipment. Payments will be at actual cost, including transportation costs to the specified location, from the supplier to the

purchaser, whether the purchaser is the Contractor, a Subcontractor, or other forces. All costs are subject to the provisions of this Subsection.

(b) Trade Discount - If a commercial trade discount is offered or available to the purchaser, it shall be credited to the Agency, even though the discount may not have actually been taken. The Agency will not take any discounts for prompt or early payment, whether or not offered or taken.

(c) Not Directly Purchased From Supplier - If Materials cannot be obtained by direct purchase from and direct billing by the supplier, the cost shall be considered to be the price billed to the purchaser less commercial trade discounts, as determined by the Engineer, but not more than the purchaser paid for the Materials. No markup other than actual handling costs will be permitted.

(d) Purchaser-Owned Source - If Materials are obtained from a supply or source wholly or partly owned by the purchaser, the cost shall not exceed the price paid by the purchaser for similar Materials furnished from that source on Pay Items, or the current wholesale price for the Materials delivered to the Project Site, whichever is lower.

00197.20 Equipment

(a) General - Equipment approved by the Engineer to perform the Force Account Work will be eligible for payment at the established rates only during the hours it is operated or on standby if so ordered by the Engineer. Equipment hours will be recorded on the daily record to the nearest quarter hour.

Except as modified by these provisions, Equipment use approved by the Engineer will be paid at the rental rates given in the most current edition of the Rental Rate Blue Books for Construction Equipment ("Blue Book"), Volumes 1, 2, and 3, published by Penton Media, Inc., and available from EquipmentWatch (phone 1-800-669-3282).

For Force Account work that totals under $10,000, the Engineer may accept for use the commercially established wholesale rental rate published from the contractor for general construction work including cost with operator as long as the total hourly cost does not exceed the method of establishing equipment, operational costs and labor as described elsewhere in this subsection and subsection 00197.30(a). If this is accepted by the Engineer, record keeping requirements will remain the same.

(b) Equipment Description - On the billing form for Equipment costs, the Contractor shall submit to the Engineer sufficient information for each piece of Equipment and its attachments to enable the Engineer to determine the proper rental rate from the Blue Book.

(c) Rental Rates (without Operator):

(1) Rental Rate Formula - Rental rates for Equipment will be paid on an hourly basis for Equipment and for attachments according to the following formula:

$$\text{Hourly Rate} = \frac{\text{Monthly Base Rate} \times \text{Rate Adjustment Factor}}{\text{176 hours/month}} + \text{Hourly Operating Rate}$$

Some attachments are considered "standard Equipment" and are already included in the monthly base rate for the Equipment. That information can be obtained from EquipmentWatch.

(2) Monthly Base Rate - The monthly base rate used above for the machinery and for attachments represents the major costs of Equipment ownership, such as depreciation, interest, taxes, insurance, storage, and major repairs.

(3) Rate Adjustment Factor - The rate adjustment factor used above will be determined as per page iii of each section of the Blue Book.

(4) Hourly Operating Rate - The hourly operating rate used above for the machinery and for attachments represents the major costs of Equipment operations, such as fuel and oil, lubrications, field repairs, tires or ground engaging components, and expendable parts.

(5) Limitations - The Blue Book "Regional Adjustment Factor" shall not apply.

If multiple attachments are included with the rental Equipment, and are not considered "standard Equipment", only the attachment having the higher rental rate will be eligible for payment, provided the attachment has been approved by the Engineer as necessary to the Force Account Work.

Rental will not be allowed for small tools that have a daily rental rate of less than $5, or for unlisted Equipment that has a fair market value of $400 or less.

The above rates apply to approved Equipment in good working condition. Equipment not in good working condition, or larger than required to efficiently perform the work, may be rejected by the Engineer or accepted and paid for at reduced rates.

(d) Moving Equipment - If it is necessary to transport Equipment located beyond the Project Site exclusively for Force Account Work, the actual cost to transport the Equipment to, and return it from, its On-Site Work location will be allowed as an additional item of expense. However, the return cost will not exceed the original delivery cost. These costs will not be allowed for Equipment that is brought to the Project Site for Force Account Work if the Equipment is also used on Pay Item or related Work.

If transportation of such Equipment is by common carrier, payment will be made in the amount paid for the freight. No markups will be allowed on common carrier transportation costs. If the Equipment is hauled with the Contractor's own forces, transportation costs will include the rental rate of the hauling unit and the hauling unit operator's wage. If Equipment is transferred under its own power, the rental rate

allowed for transportation time will be 75% of the appropriate hourly rate for the Equipment, without attachments, plus the Equipment operator's wage.

(e) Standby Time - If ordered by the Engineer, standby time will be paid at 40% of the hourly rental rate calculated according to this Subsection, excluding the hourly operating rate. Rates for standby time that are calculated at less than $1 per hour will not be paid. Payment will be limited to not more than eight hours in a 24-hour period or 40 hours in a one-week period.

(f) Blue Book Omissions - If a rental rate has not been established in the Blue Book, the Contractor may:

- If approved by the Engineer, use the rate of the most similar model found in the Blue Book, considering such characteristics as manufacturer, capacity, horsepower, age and fuel type;
- Request EquipmentWatch to furnish a written response for a rental rate on the Equipment, which shall be presented to the Engineer for approval; or
- Request that the Engineer establish a rental rate.

(g) Outside Rental Equipment - If Contractor- or Subcontractor-owned Equipment is not available, and Equipment is rented from outside sources, payment will be based on the actual paid invoice. If the invoice specifies that rental rate does not include fuel, lubricants, field repairs, and servicing, an amount equal to the Blue Book hourly operating cost may be added for those items that were excluded.

The Agency may reduce the payment when the invoice amount plus allowance is higher than the amount authorized under (c) through (f) of this Subsection.

The provisions of 00180.20(c) apply to owner-operated Equipment.

00197.30 Labor

The Contractor will be paid for all labor engaged directly on Force Account Work, including Equipment operators and supervisors in direct charge of the specific force account operations.

(a) Standard Calculation - The hourly amount paid to the Contractor for each employee engaged on Force Account Work will be two times the actual base hourly wage (excluding fringe benefits, vacation, and all other direct or indirect costs including subsistence) paid to the employee for:

(1) Work under each Force Account Work order, up to an accumulated total value for labor under that order of $10,000; and

(2) Workers whose work class has an industrial accident insurance rate of 25% or less as determined by the National Council on Compensation Insurance (NCCI) for the assigned risk pool for the appropriate worker class.

This amount paid to the Contractor will be full compensation for all costs associated with labor on Force Account Work including wages, fringe benefits, vacation, insurance, markup and other direct or indirect costs except for per diem costs. If per diem is paid to

workers for similar Pay Item Work, per diem costs will be paid on an actual-cost basis for the Force Account Work. The markup described in 00197.80 will not be added, except that the supplemental markup for Force Account Work performed by Subcontractors will be allowed.

(b) Work Value for Labor over $10,000 or NCCI Rate over 25% - After the accumulated value of labor performed under a Force Account Work order exceeds either 00197.30(a-1) or 00197.30(a-2), payment for Force Account Work labor will be calculated as follows:

(1) Wages - The actual wages paid to laborers and supervisors, if those wages are paid at rates not more than those for comparable labor currently employed on the Project, or at the recognized, current, prevailing rates in the locality of the Project.

(2) Required Contributions - The actual cost of industrial accident insurance, unemployment compensation contributions, payroll transit district taxes, and social security for old age assistance contributions incurred or required under statutory law and these Specifications. The actual cost of industrial accident insurance is the NCCI rate for the assigned risk pool for the appropriate work class multiplied by the experience modification factor for the Contractor.

(3) Required Benefits - The actual amount paid to, or on behalf of, workers as per diem and travel allowances, health and welfare benefits, pension fund benefits, or other benefits, when such amounts are required by a collective bargaining agreement or other employment contract generally applicable to the classes of labor employed on the Project. The cost of labor calculated under this Subsection will also be subject to the applicable markups in 00197.80.

00197.40 Invoices for Special Services

Invoices for Special Services that reflect current market pricing may be accepted without complete itemization of Materials, Equipment, and labor costs, if the itemization is impractical or not customary. The invoice for Special Services shall show credit for commercial trade discounts offered or available.

No percentage markup will be allowed other than that specified in 00197.80.

00197.80 Percentage Allowances

To the Contractor's actual costs incurred, as limited in this Section 00197, amounts equal to a percentage markup of such costs will be allowed and paid to the Contractor as follows:

Subsection	Percent
00197.10 Materials	17
00197.20 Equipment	17
00197.30(b) Labor	22
00197.40 Special Services	17

When a Subcontractor performs ordered Force Account Work, the Contractor will be allowed a supplemental markup of 8% on each Force Account Work order.

These allowances made to the Contractor will constitute complete compensation for overhead, general and administrative expense, profit, and all other Force Account Work costs that were incurred by the Contractor, or by other forces that the Contractor furnished. No other reimbursement, compensation, or payment will be made.

00197.90 Billings

Billings for Force Account Work by the Contractor shall be submitted for the Engineer's approval on forms provided by the Agency or approved by the Engineer. Billings for Materials (other than Incidental items out of the inventory of the Contractor o r Subcontractors), rental Equipment from sources other than the Contractor or Subcontractors, and Special Services, shall be accompanied by copies of invoices for the goods and services. The invoices shall be fully itemized showing dates, quantities, unit prices, and complete descriptions of goods and services provided. Invoices for amounts of $10 or less per invoice are not required, unless requested by the Engineer.

Costs included on the billings shall comply with the guidelines of 00197.10 through 00197.40. When a billing for Force Account Work has been paid at the Project level, no further corrections will be made because of further review if those corrections amount to less than $10.

Section 00199 - Disagreements, Protests and Claims

Description

00199.00 General

This Section details the process through which the parties agree to resolve any disagreement concerning additional compensation or concerning a combination of additional compensation and Contract Time. (See 00180.80 for disagreements and claims concerning additional Contract Time only, and 00195.95 for disagreements and claims concerning correction of final compensation.) The Agency will not consider direct disagreements, protests, or claims from Subcontractors, Materials suppliers, or any other Entity not a party to the Contract.

Provisions and Requirements

00199.10 Procedure for Resolving Disagreements

When disagreements occur concerning additional compensation or a combination of additional compensation and Contract Time, the Contractor shall first pursue resolution through the Engineer of all issues in the dispute, including without limitation the items to be included in the written notice in 00199.20. If the discussion fails to provide satisfactory resolution of the disagreement, the Contractor shall follow the protest procedures outlined in 00199.20. If the Engineer denies all or part of the Contractor's protest, and the Contractor desires to further pursue the issues, the Contractor shall submit a claim for processing according to 00199.30.

00199.20 Protest Procedure

If the Contractor disagrees with anything required in a Change Order or other written or oral order from the Engineer, including any direction, instruction, interpretation, or determination that, in the Contractor's opinion, entitles or would entitle the Contractor to additional compensation, the Contractor shall do all of the following in order to pursue a protest and preserve its claim:

(a) Oral Notice - Give oral notice of protest to the Engineer and outline the areas of disagreement before starting or continuing the protested Work.

(b) Written Notice - File a proper written notice of protest with the Engineer within seven Calendar Days after receiving the protested order. In the notice the Contractor shall:

- Describe the acts or omissions of the Agency or its agents that allegedly caused or may cause damage to the Contractor, citing specific facts, persons, dates and Work involved;
- Describe the nature of the damages;
- Cite the specific Contract provision(s) that support the protest;
- Include the estimated dollar cost, if any, of the protested Work, and furnish a list of estimated Materials, Equipment and labor for which the Contractor might request additional compensation; and

- If additional compensation is estimated to be due, include the estimated amount of additional time required, if any.

The Engineer has no responsibility to evaluate the protest unless the Contractor has timely filed a proper notice submitting all of the above information. Failure to comply with this notice requirement renders the notice improper.

(c) Records - Keep complete records of all costs and time incurred throughout the protested Work, and allow the Engineer access to those and other supporting records. Provide daily records of protested Work, on a weekly basis, on a schedule to be set by agreement with the Engineer.

(d) Comparison of Records - Provide the Engineer adequate facilities for keeping cost and time records of the protested Work. The Contractor and the Engineer will compare records and either bring them into agreement at the end of each day, or record and attempt to explain any differences.

(e) Work to Proceed - In spite of any protest, proceed promptly with the Work ordered by the Engineer.

(f) Evaluation of Protest - The Engineer has no responsibility for evaluating a protest that is not timely filed, or for which adequate supporting documentation has not been kept. Provided the procedures above are followed, the Engineer will promptly evaluate all protests and, if the protest is denied, advise the Contractor in writing of the reasons for full or partial denial. If a protest is found to be valid, the Engineer will, within a reasonable time, make an equitable adjustment of the Contract. Adjustment of time will be evaluated according to 00180.80.

(g) Protest Evaluation by Third Party Neutral - If the Engineer agrees that the Contractor has fully complied with the requirements described in 00199.20(b), and if the Engineer fully or partially denies, in writing, the Contractor's protest according to 00199.20(f), the Contractor may request that a mutually selected Third Party Neutral review the protest. Procedures for selecting, using, and paying for the cost of the Third Party Neutral will be specified by Change Order. If the Contractor does not accept the Engineer's evaluation of the protest, or either the Contractor or Engineer disagrees with the resolution recommended by the Third Party Neutral, the Contractor may pursue a claim as described in 00199.30.

00199.30 Claims Procedure

(c) **General** - If the Contractor believes that additional compensation is due, or a combination of additional compensation and Contract Time, and has pursued and exhausted all the procedures provided in 00199.10 and 00199.20 to resolve a disagreement and protest, the Contractor may file a claim.

The Agency's Contract is with the Contractor. There is no contractual relationship between the Agency and any Subcontractor. It is the Contractor's responsibility to fully analyze any claim before presenting it to the Agency. In addition, when a claim includes Work done or costs incurred by a Subcontractor, Materials supplier, or any Entity other than the Contractor,

the Contractor remains solely responsible for presenting the claim to the Agency.

Claims that include Work done or costs incurred by any Entity other than the Contractor will not be considered by the Agency unless the Contractor has:

- Completed and provided its own written analysis and evaluation of the claim; and
- Verified by its own independent review and analysis the amount of compensation sought.

(b) Claims Requirements - At any time during the progress of the Work, but not later than 15 Calendar Days following the date of the Notice of Substantial Completion, the Contractor shall submit to the Engineer claims for additional compensation or a combination of additional compensation and Contract Time additional to that specified in the Contract. For a claim not submitted within the 15 day limit, that has not met the requirements of 00199.20, or is not filed as provided in 00199.30, the Contractor waives any claim for additional compensation or for additional compensation and Contract Time, and the Agency may reject the claim.

To be considered, claims for additional compensation, or for additional compensation and Contract Time, shall be completed according to 00199.30 and shall be submitted with the required information and in the format below and labeled as required below for each claimed issue:

(Part 1) Executive summary (label page 1.1 through page 1.X) - In the Executive summary, include a detailed, factual statement of the claim for additional compensation and Contract Time, if any, with necessary dates and locations of Work involved in the claim, the dates of when the event arose, and when notice was given to the Agency. Also include detailed facts supporting the Contractor's position relative to the Engineer's decision (see 00199.20(f));

(Part 2) Copies of the Contract Specifications that support the Contractor's claim (label page 2.1 through page 2.X);

(Part 3) Theory of entitlement supporting the claim (label page 3.1 through page 3.X) - Include a narrative of how or why the specific Contract Specifications support the claim and a statement of the reasons why such Specifications support the claim;

(Part 4) Itemized list of claimed amounts (label page 4.1 through page 4.X) - Claimed damages that resulted from the event with a narrative of the theories and documents used to arrive at the value of the damages;

(Part 5) Additional Contract Time requests (label page 5.1 through page 5.X) - If the claim is for a combination of additional compensation and Contract Time, submit a copy of the schedule that was in effect when the event occurred and a detailed narrative which explains how the event impacted Contract Time. In addition, if an Agency-caused delay is claimed:

- Include the specific days and dates under claim;
- Provide detailed facts about the specific acts or omissions of the Agency that allegedly caused the delay, and the specific reasons why the resulting delay was unreasonable; and
- A schedule analysis that accurately describes the impacts of the claimed delay;
- (Also see 00180.80 for additional requirements regarding claims for Contract Time and causes that are eligible and ineligible for consideration.);

(Part 6) Copies of actual expense records (label page 6.1 through page 6.X) - Include documents that contain the detailed records and which support and total to the exact amount of additional compensation sought. Include the information and calculations necessary to support that amount. That amount may be calculated on the basis of Section 00197, if applicable, or may be calculated using direct and indirect costs presented in the following categories:

- Direct Materials;
- Direct Equipment. The rate claimed for each piece of Equipment shall not exceed the actual cost. In the absence of actual Equipment costs, the Equipment rates shall not exceed 75% of those calculated under the provisions of 00197.20. For each piece of Equipment, the Contractor shall include a detailed description of the Equipment and attachments, specific days and dates of use or standby, and specific hours of use or standby;
- Direct labor;
- Job overhead;
- General and administrative overhead; and
- Other categories as specified by the Contractor or the Agency;

(Part 7) Supporting documents (label page 7.1 through page 7.X) - Include copies of, or excerpts from the following:

- Any documents that support the claim, such as manuals standard to the industry and used by the Contractor; and
- Any daily reports or diaries related to the event, photographs or media that help explain the issue or event (optional), or all other information the Contractor chooses to provide (optional);

(Part 8) Contractor evaluation of a lower tier claim (label page 8.1 through 8.X) - If the claim includes Work done or costs incurred by a Subcontractor, Materials supplier, or any Entity other than the Contractor, the following are required:

Data required by the other Subsections of 00199.30(b);

- Copy of the Contractor's separate analysis and evaluation;
- Copy of the Contractor's independent review and analysis of the amount of damages sought; and

(Part 9) Certification (label page 9.1 through 9.X) - A certified statement by the Contractor, Subcontractor or Materials supplier, as appropriate, as to the validity of facts and costs containing the following language:

Under penalty of law for perjury or falsification, the undersigned, (Name), (Title), (Company) certifies that this claim for additional compensation for Work on the Contract is a true statement of the actual costs incurred (in the amount of $, exclusive of interest) and is fully documented and supported under the Contract between the parties.

*Signature:*_____

*Date:*_____*, 20*

*Subscribed and sworn before me this*_____*day of*_____*, 20*____

_____
Notary Public

My commission expires _____

A person authorized to execute Change Orders on behalf of the Contractor must countersign this statement.

Claims shall be made in writing, and shall include all information necessary for the Agency to properly and completely analyze the claim. All pages shall have page numbers and be marked with the numbering system shown above. The Agency reserves the right at any time to request additional information related to the claim or the Contract either directly or through Agents working toward resolution of the disputed or claimed events and issues.

(c) Records Required - The Contractor shall keep full and complete records of the actual costs incurred for the submitted claim. These records shall include all worksheets used to prepare the claim establishing the cost components for items of the claim.

(d) Access to Records - The Contractor shall provide the Engineer access to all Contractor records required to determine the facts, contentions, and costs involved in the claim. The Engineer may perform an audit of these records. The Contractor shall retain all Contract records for a period of at least three years after Final Acceptance of the Project by the Agency, or until all disputes, including litigation, if any, are resolved (the "record retention period"). The Agency and/or its agents shall be provided full access to all Contract records during the record retention period.

(e) Compliance Required - Full compliance by the Contractor with the provisions of this Section is a condition precedent to the commencement of any lawsuit by the Contractor to enforce any claim.

00199.40 Claim Decision; Review; Exhaustion of Administrative Remedies

The Agency intends to resolve all claims at the lowest possible administrative level. If the Engineer denies the claim for additional compensation or a combination of additional compensation and Contract Time, in full or in part, according to 00199.40(a), the Contractor may request review of the denial. The disputed claim for additional compensation or a combination of additional compensation and Contract Time may then be resolved, in full or in part, at any of the three progressive steps of claim review procedure as specified in (b) through (d) of this Subsection. If the Engineer has denied a claim, in full or in part, for Contract Time only according to 00180.80, or has denied a claim, in full or in part, for correction of final compensation according to 00195.95, those disputed claims may then be resolved, in full or in part, at any of the three progressive steps of claim review procedure as specified in (b) through (d) of this Subsection. For all claims, all of the actions and review under each step of the review process shall occur before the review can be advanced to the next higher step.

If, at any step in the claim decision or review process, the Contractor fails to promptly submit requested information or documentation that the Agency deems necessary to analyze the claim, the Contractor is deemed to have waived its right to further review, and the claim will not be considered properly filed and preserved.

(a) Decision by the Engineer - The Engineer will, as soon as practicable, consider, investigate, and evaluate a Contractor's claim for additional compensation, or for a combination of additional compensation and Contract Time, if submitted as required by 00199.30. If the Engineer determines that additional information or documentation is needed to allow proper analysis of the claim, the Contractor shall meet with the Engineer within 14 Calendar Days, or as otherwise agreed by the parties, to present the additional information or documentation, or make other arrangements with the Engineer to supply that material.

The Engineer will advise the Contractor of the decision to accept or deny the claim, and the reasons for any full or partial denial of the claim, within 30 Calendar Days of receipt of the Contractor's claim, or the receipt of requested additional information or documentation regarding the claim, whichever is later, unless the Engineer and Contractor have agreed upon a longer response time. If the Contractor does not accept the Engineer's decision, the Contractor may, within 10 Calendar Days of receipt of the written decision, request in writing that the Engineer arrange a review at Step 1 (see (b) below).

(b) Step 1: RUSA General Manager - The Contractor shall request that the Engineer arrange a meeting with the Roseburg Urban Sanitary Authority General Manager in order to present the denied or partially denied claim for formal review and discussion. The meeting will take place within 21 Calendar Days of the Agency's receipt of the request, or as otherwise agreed by the parties.

If the General Manager determines that the Contractor must furnish additional information or documentation to allow proper analysis of the claim, the manager will schedule a second meeting, to be held within 14 Calendar Days, or as otherwise

agreed by the parties, at which the Contractor shall present the requested information or documentation.

The General Manager will provide a written decision to the Contractor within 30 Calendar Days of the last Step 1 meeting.

If the Contractor does not accept the Step 1 decision, the Contractor may, within 10 Calendar Days of receipt of the written decision, request in writing that the Engineer arrange a review at Step 2 (see (c) below).

(c) Step 2: RUSA Board of Directors - The Contractor shall request a meeting with the Board of Directors to present the claim for final Agency review. The presentation will take place within 21 Calendar Days of the Agency's receipt of the Contractor's written request, or as otherwise agreed by the parties.

If the Board determines that the Contractor must furnish additional information or documentation to allow proper analysis of the claim, the Board will schedule a second meeting, to be held within 14 Calendar Days or as otherwise agreed by the parties, at which the Contractor shall present the requested information or documentation. The Board of Directors will provide a written decision to the Contractor within 30 Calendar Days of the final Step 2 meeting.

(d) Step 3: Litigation - This step applies to:

- Claims over $250,000;
- Appeals of Agency Decisions issued under Step 2 above.

The Contractor must follow each step in order, and exhaust all available administrative remedies before resort to litigation. Lawsuits must be properly filed in a court of competent jurisdiction within six months from the date of the final decision that exhausted the Contractor's available administrative remedies under this Section 00199.

In any litigation, the entire text of any order or permit issued by a governmental or regulatory authority, as well as any documents referenced or incorporated therein by reference, shall be admissible for the purpose of Contract interpretation.

The Contract shall not be construed against either party regardless of which party drafted it. Other than as modified by the Contract, the applicable rules of contract construction and evidence shall apply. This Contract shall be governed by and construed according to the laws of the State of Oregon without regard to principles of conflict of laws.

Any dispute between the Agency and the Contractor that arises from or relates to this Contract and that is not resolved under the provisions of Section 00199 shall be brought and conducted solely and exclusively within the Circuit Court for the State of Oregon in the county where the Agency's main office is located; provided, however, if a dispute must be brought in a federal forum, then it shall be brought and conducted solely and exclusively within the United States District Court for the District of Oregon. In no event shall this Subsection be construed as a waiver by Roseburg Urban Sanitary Authority on any form of defense or immunity, whether sovereign immunity, governmental immunity, immunity based on the Eleventh Amendment to the Constitution of the United States or otherwise, from any claim or from the jurisdiction of any court. CONTRACTOR BY

EXECUTION OF THE CONTRACT HEREBY CONSENTS TO THE IN PERSONAM JURISDICTION OF THE COURTS REFERENCED IN THIS SECTION.

00199.50 Mediation

Notwithstanding the formal claims procedure specified above, the parties may enter into nonbinding mediation by mutual agreement at any time, in which case the parties may also agree to suspend the time requirements in Section 00199 pending the outcome of the mediation process. The rules, time and place for mediation, as well as selection of the mediator, shall be established by mutual agreement. Costs shall be divided equally between the Contractor and the Agency. Either party may terminate mediation at any time upon five Calendar Days notice to the other, after which the time requirements of Section 00199 shall be automatically reinstated.

ROSEBURG URBAN SANITARY AUTHORITY
ROSEBURG, OREGON
HOOKER ROAD SEWER PROJECT

The Work to be done under this Contract consists of the following sewer improvements in the vicinity of Hooker Road, Hwy 99, General Avenue, and Aviation Drive.

1. Install, maintain and remove temporary traffic control devices.
2. Install, maintain and remove erosion control measures.
3. Clearing and grubbing.
4. Abandonment of pipe and manholes.
5. Perform earthwork and grading.
6. Complete sanitary sewer rehabilitation.
7. Furnish and install sanitary sewer manholes and pipes.
8. Furnish and place aggregate base.
9. Furnish and place hot mix asphalt concrete pavement.
10. Restore permanent pavement markings.
11. Perform additional and incidental Work as called for by the Specifications and Plans.

APPLICABLE SPECIFICATIONS

The Specifications that are applicable to the Work on this Project is the 2018 edition of the "Oregon Standard Specifications for Construction" (2018 Edition).

All number references in these Special Provisions shall be understood to refer to the Sections and subsections of the Standard Specifications bearing like numbers and to Sections and subsections contained in these Special Provisions in their entirety.

CLASS OF PROJECT

This is a Roseburg Urban Sanitary Authority (RUSA) Project.

ROSEBURG URBAN SANITARY AUTHORITY

SPECIAL PROVISONS

FOR

HOOKER ROAD SEWER PROJECT
ROSEBURG URBAN SANITARY AUTHORITY
ROSEBURG, OREGON

PROFESSIONAL OF RECORD CERTIFICATION(s):

Seal w/signature 	I certify the Special Provision Section(s) are applicable to the design for the subject project for temporary traffic control, temporary erosion control, drainage and sewers, earthwork, roadway, pavements, and striping. Modified Technical Specifications were prepared by me or under my supervision. Section 00210, 00220, 00225, 00280, 00290, 00305, 00310, 00320, 00330, 00331, 00340, 00405, 00408, 00410, 00411, 00412, 00413, 00415, 00440, 00442, 00444, 00445, 00470, 00490, 00492, 00495, 00610, 00620, 00641, 00730, 00744, 00745, 00746, 00850, 00860, 01020, 01030, 01040, 02010, 02015, 02050, 02070, 02080, 02221, 02440, 02450, 02630, 02690
Date Signed: 11/16/2020	

TABLE OF CONTENTS

Special Provisions to the 2018 Oregon Standard Specifications for Construction (OSS)

PART 00100 – GENERAL CONDITIONS..... 5
Section 00110 – Organization, Conventions, Abbreviations and Definitions
Section 00120 – Bidding Requirements and Procedures
Section 00130 – Award and Execution of Contract
Section 00140 – Scope of Work
Section 00150 – Control of Work
Section 00160 – Source of Materials
Section 00165 – Quality of Materials
Section 00170 – Legal Relations and Responsibilities
Section 00180 – Prosecution and Progress
Section 00190 – Measurement of Pay Quantities
Section 00195 – Payment
Section 00196 – Payment for Extra Work
Section 00197 – Payment for Force Account Work
Section 00199 – Disagreements, Protests and Claims
PART 00200 – TEMPORARY FEATURES AND APPURTENANCES.....14
Section 00210 – Mobilization
Section 00220 – Accommodations for Public Traffic
Section 00225 – Work Zone Traffic Control
Section 00280 – Erosion and Sediment Control
Section 00290 – Environmental Protection
PART 00300 – ROADWORK 21
Section 00305 – Construction Survey Work
Section 00310 – Removal of Structures and Obstructions
Section 00320 – Clearing and Grubbing
Section 00330 – Earthwork
Section 00331 – Subgrade Stabilization
Section 00340 – Watering
PART 00400 – DRAINAGE AND SEWERS 23
Section 00405 – Trench Excavation, Bedding, and Backfill
Section 00408 – Lateral Lining
Section 00410 – Common Provisions for Pipe Lining
Section 00411 – Pipe Bursting and Slip Lining
Section 00412 – Cured-in-Place Pipe Lining
Section 00413 – GRP Cured-in-Place Pipe Lining and UV Cure
Section 00415 – Video Pipe Inspection
Section 00440 – Commercial Grade Concrete
Section 00442 –Controlled Low Strength Materials
Section 00444 – Private Property Sewer Work
Section 00445 – Sanitary, Storm, Culvert, Siphon, and Irrigation Pipe
Section 00470 – Manholes, Catch Basins, and Inlets

Section 00490 – Work on Existing Sewers and Structures
Section 00492 – Manhole Rehabilitation
Section 00495 – Trench Resurfacing
PART 00600 – BASES 54
Section 00610 – Reconditioning Existing Roadway
Section 00620 – Cold Plan Pavement Removal
Section 00641 – Aggregate Subbase, Base, and Shoulder
PART 00700 – WEARING SURFACES 55
Section 00730 – Emulsified Asphalt Tack Coat
Section 00744 –Asphalt Concrete Pavement
Section 00745 – Hot Mixed Asphalt Concrete
Section 00746 – Crack Sealing Flexible Pavements
PART 00800 – PERMANENT TRAFFIC SAFETY AND GUIDANCE DEVICES 57
Section 00850 – Common Provisions for Pavement Markings
Section 00860 – Longitudinal Pavement Markings – Paint
PART 01000 – RIGHT OF WAY DEVELOPMENT AND CONTROL.....57
Section 01020 – Landscape Restoration
Section 01030 – Seeding
Section 01040 – Planting
PART 02000 – MATERIALS 59
Section 02010 – Portland Cement
Section 02015 – Portland Cement Concrete Repair Material
Section 02050 – Curing Materials
Section 02070 – Bonding Agents
Section 02080 – Grout
Section 02221 – Repair, Resurfacing, and Lining Materials for Manhole Rehabilitation
Section 02440 – Joint Materials
Section 02450 – Manhole and Inlet Materials
Section 02630 – Base Aggregates
Section 02690 – PCC Aggregates

Exhibit B

RUSA Standard Drawings

Exhibit C

RUSA Permit of Entry (executed)

Exhibit D

Geotechnical Exploration Report

Exhibit E

Genesee & Wyoming Railroad Protective Application

Exhibit F

Douglas County Right-of-Way Occupancy Permit Application

Exhibit G

City of Roseburg Street Occupancy Permit

SECTION 00110 - ORGANIZATION, CONVENTIONS, ABBREVIATIONS AND DEFINITIONS

Comply with the RUSA General Conditions and Section 00110 of the Standard Specifications, modified as follows:

00110.20 Definitions – Add the following after the first paragraph:

This is a RUSA project. Substitute terms pertaining to:

- "Agency" with the "RUSA"
- "Department" with "RUSA"
- "Construction Contracts Unit" with "RUSA"
- Other like terms with "RUSA"

SECTION 00120 - BIDDING REQUIREMENTS AND PROCEDURES

Replace Section 00120 of the Standard Specifications except for the Section number and title, with the following:

Comply with the RUSA General Conditions.

SECTION 00130 - AWARD AND EXECUTION OF CONTRACT

Replace Section 00130 of the Standard Specifications except for the Section number and title, with the following:

Comply with the RUSA General Conditions.

SECTION 00140 - SCOPE OF WORK

Comply with the RUSA General Conditions and Section 00140 of the Standard Specifications.

SECTION 00150 - CONTROL OF WORK

Comply with RUSA General Conditions and Section 00150 of the Standard Specifications modified as follows:

00150.50(b) Agency Responsibilities – Add the following paragraph to the end of this subsection:

The locations, depth and description of existing utilities shown were compiled from available GIS mapping, records and/or field observations. The Engineer or Utility Companies do not guarantee the accuracy or the completeness of such locations. Additional utilities may exist in the project area.

00150.50(c) Contractor Responsibilities - Replace this subsection, except for the subsection number and title, with the following:

The Contractor shall:

- Follow applicable rules adopted by the Oregon Utility Notification Center;
- Contact Utility owners during Bid preparation and after the Contract is awarded to verify all Utilities' involvement on the Project Site;
- Coordinate Project construction with the Utilities' planned adjustments, take all precautions necessary to prevent disruption of Utility service, and perform its Work in the manner that results in the least inconvenience to the Utility owners;
- Include all Utility adjustment work, whether to be performed by the Contractor or the Utilities, on the Contractor's Project Work schedule submitted under 00180.41;
- Protect from damage or disturbance any Utility that remains within the area in which Work is being performed. Maintain and re-establish location marks according to OAR 952-001-0090(2)(a). Coordinate re-establishment of the location marks with the associated Utility;
- Not disturb an existing Utility if it requires an unanticipated adjustment, but shall protect the Utility from damage or disturbance and promptly notify the Engineer;
- Determine the exact location before excavating within the reasonable accuracy zone according to OAR 952-001-0090(2)(c);
- Backfill any exposed Utilities as recommended and approved by the Utility representative. Obtain Utility locate warning tape from the Utility and replace damaged or removed warning tape. Utility locate warning tape may not be present at all existing Utilities;
- Stake, place warning tape, and maintain no work limits around critical Utility facilities as shown or directed by the Engineer and the Utility;
- Verify all utility locations prior to construction. Pothole as shown on the Contract Plans and/or as necessary to provide such verification, and arrange for the relocation of any utilities in conflict with the proposed Work.
- Support and protect pipes, conduits and other services where they cross an open excavation.
- In addition to the notification required in OAR 952-001-0090(5), notify the Engineer and the Utility as soon as the Contractor discovers any previously unknown Utility conflicts or issues. Contrary to the OAR, stop excavating until directed by the Engineer and allow the Utility a minimum of two weeks to relocate or resolve the previously unknown Utility issues; and
- Report to the Engineer any Utility owner who fails to cooperate or fails to follow the planned Utility adjustment.

Subject to the Engineer's approval, the Contractor may adjust the Utilities by asking the Utility owners to move, remove, or alter their facilities in ways other than as shown on the Plans or in the Special Provisions. The Contractor shall conduct all negotiations, make all arrangements, and assume all costs that arise from such changes.

Add the following subsection:

00150.50(f) Utility Information:

There are no anticipated conflicts with the Utilities listed below. The Contractor shall contact those Utilities having buried facilities and request that they locate and mark them for their protection prior to construction.

Utility	Contact Person's Name and Phone Number
1. Pacific Power (electricity provider)	Mark Hammer (541) 430-6211
2. Avista Utilites (natural gas provider)	Ryan Forsloff (800) 227-9187
3. Roseburg Public Works Department (water)	Tony Dietrich (541) 492-6896
4. Roseburg Public Works Department (storm sewer)	Jim Johnson (541) 492-6896
5. ODOT Electrical Crew (J-boxes, push buttons)	Brian Henry (541) 957-3669
6. ODOT Traffic Signals (Timing, Loops, etc.)	Ray Lapke (541) 957-3500

Energized power lines are located within the Project limits. The Contractor shall maintain at least 10 feet of safety clearance. Exceptions require written approval from Power Company and will require an On-Site safety watcher at no cost to the Contractor. The Contractor shall provide the Engineer with a copy of the written approval of exception before beginning work.

Notify each utility at least 15 days prior to beginning any work on this project. Notify each utility (1) week in advance each time that the project schedule-of-record is changed.

Notify each organization at least 10 days prior to beginning any work on this project. Notify each organization (1) week in advance each time that the project schedule-of-record is changed.

00150.60(a) Load and Speed Restrictions for Construction Vehicles and Equipment - Add the following bullet to the end of the bullet list:

- The Contractor shall restrict the combined weights of construction vehicles, Equipment, and Materials on Bridges according to 00220.45.

00150.60(d) Access and Work Zone – Construction equipment access shall be limited to existing public right-of-way and the access locations shown on the construction plans.

00150.70 Detrimental Operations - Replace the paragraph that begins "The Contractor shall avoid…" with the following paragraph:

The Contractor shall avoid operations whose methods, conditions, or timing may injure people or damage property or the Work. Damage may include without limitation, staining surfaces with mud or asphalt or damaging Utilities and foundations. (also see 00150.60, 00150.75, and Section 00170)

00150.80 Removal of Unacceptable and Unauthorized Work - Replace the paragraphs that begin "The Agency will not pay…" and "If, when ordered by…" with the following two paragraphs:

The Agency will not pay the Contractor for unacceptable Work, except as provided in 00150.25, or for unauthorized work. The Engineer may issue a written order for the correction or removal of such work at the Contractor's sole expense.

If, when ordered by the Engineer, the Contractor fails to correct or remove unacceptable Work or remove unauthorized work, the Engineer may have the correction, removal, or removal and replacement, done by others and deduct the entire cost from monies due or to become due the Contractor under the Contract.

SECTION 00160 - SOURCE OF MATERIALS

Comply with the RUSA General Conditions and Section 00160 of the Standard Specifications modified as follows:modified as follows:

00160.05 Qualified Products List (QPL) – Add the following subsection.

The QPL is a listing of manufactured products available on the market (shelf items) that ODOT has evaluated and found suitable for a specified use in highway construction. The QPL is available from ODOT's Construction Section website at:

http://www.oregon.gov/ODOT/HWY/CONSTRUCTION/pages/index.aspx

The most current published PDF version of the QPL on ODOT's Construction Section website at the time of Advertisement is the version in effect for the Project. The Engineer may approve for use a conditionally qualified product, or a product qualified for inclusion in a later edition of the QPL, if the Engineer finds the product acceptable for use on the Project.

Use of listed products shall be restricted to the category of use for which they are listed. The Contractor shall install all products as recommended by the manufacturer. The Contractor shall replace qualified products not conforming to Specifications or not properly handled or installed at no additional cost to the Agency.

SECTION 00165 – QUALITY OF MATERIALS

Comply with the RUSA General Conditions and Section 00165 of the Standard Specifications modified as follows:

00165.03 Testing by Agency – Replace this subsection except for the subsection number and title, with the following:

No testing will be performed by RUSA. All testing shall be the responsibility of the Contractor.

00165.04 Cost of Testing – Replace this subsection except for the subsection number and title, with the following:

All testing required to be performed by the Contractor will be considered incidental and will be at the Contractor's expense.

00165.10(a) Field-Tested Materials - Add the following sentence to the end of this subsection:

The most current version of the MFTP on the date of Advertisement is the version in effect for the Project.

00165.10(b) Nonfield-Tested Materials - Add the following sentence to the end of this subsection:

The most current version of the NTMAG on the date of Advertisement is the version in effect for the Project.

00165.20 Materials Specifications and Test Method References - Replace this subsection, except for the subsection number and title, with the following:

References to Materials specifications and test methods of ODOT, WAQTC, AASHTO, ASTM, other governmental agencies, or other recognized organizations mean those officially adopted and in current use by the agency or organization on the date of Advertisement.

00165.30(a) Contractor's Duties - Replace the bullet that begins "Provide and administer a quality…" with the following bullet:

- Provide and administer a quality control program as described in the Quality Assurance Program portion of the MFTP. Upon request, the Contractor shall provide to the Engineer the names, telephone numbers, and copies of certifications for all personnel performing field testing; and

00165.30(c) Acceptance of Field-Tested Materials - Replace the paragraph that begins "If the Agency's verification testing…" with the following paragraph:

If the Agency's verification test results do not verify the Contractor's test results, the Agency may require additional testing to determine whether the Materials meet Specifications. The Contractor shall perform additional testing or provide samples to the Agency for testing as directed. If the Materials do not meet Specifications, the Contractor shall reimburse the Agency for the cost of the additional testing, which may be deducted from monies due or to become due the Contractor under the Contract. Incorporated Materials that do not meet Specifications will be evaluated according to 00165.01 and 00150.25. If the Materials meet Specifications the Agency will pay the cost for the additional testing.

SECTION 00170 - LEGAL RELATIONS AND RESPONSIBILITIES

Comply with the RUSA General Conditions and Section 00170 of the Standard Specifications modified as follows:

00170.01(b) State of Oregon Agencies - Add the following Agency to the list:

Oregon Department of Transportation

00170.60 – Safety, Health, and Sanitation Provisions - Add the following paragraph to the end of this subsection:

The Contractor shall provide and maintain proper portable sanitary facilities for their employees and their subcontractors' employees during day and night shifts that will comply with the regulations of the local and State departments of health and as directed by the Engineer.

00170.70(a) Insurance Coverages - Add the following to the end of this subsection:

The Contractor shall purchase and maintain such liability and other insurance as is appropriate for the furnishing and installing of project materials and services as will provide protection from claims set forth below which may arise out of or result from the Contractor's furnishing of the project materials and Contractor's other obligations under this agreement, whether the furnishing of contract goods or services, or other obligations are to be performed by the Contractor, any subcontractor or supplier, or by anyone directly or indirectly employed by and of them.

1. claims under workers' compensation, disability benefits, and other similar employee benefit acts;
2. claims for damages because of bodily injury, occupational sickness or disease, or death of Contractor's employees;
3. claims for damages because of bodily injury, sickness or disease, or death of any person other than Contractor's employees;
4. claims for damages insured by reasonably available personal injury liability coverage which are sustained: (i) by an person as a result of an offense directly or indirectly related to the employment of such person by Contractor, or (ii) by any other person for any other reason;
5. claims for damages, other than to the materials to be delivered and installed by this contract, because of injury to or destruction of tangible property wherever located, including loss of use resulting therefrom; and
6. claims for damages because of bodily injury or death of any person or property damage arising out of the ownership, maintenance, or use of any motor vehicle.

The policies of insurance required by this Paragraph include Roseburg Urban Sanitary Authority, 1297 Grandview Avenue, Roseburg, Oregon 97470 as additional insured, subject to any customary exclusion in respect of professional liability. The coverage shall include:

1. Coverage for the respective officers, directors, employees and agents of RUSA. The insurance afforded to these additional insureds shall provide primary coverage for all claims covered thereby;
2. Include at least the specific coverages and be written for not less than limits of liabilit y provided below or required by Laws or Regulations, whichever is greater;
3. Include completed operations insurance;

4. Contain a provision or endorsement that the coverage afforded will not be canceled, materially changed, or renewal refused until at least 30 days prior written notice has been given to RUSA and Contractor.
5. Remain in effect at least until final payment and at all times thereafter when the Contractor may be correcting, removing, or replacing nonconforming work done by the Contractor.
6. With respect to completed operations insurance, and any insurance coverage written on a claims-made basis, remain in effect for at least 2 years after final payment.

The limits of liability for the insurance required shall provide coverage for not less than the following amounts:

1. Workers' Compensation:
   a. State: Statutory
   b. Employer's Liability: $500,000
2. Contractor's General Liability under this Paragraph shall include completed operations and product liability coverages and eliminate the exclusion with respect to property under the care, custody, and control of Contractor.
   a. General Aggregate: $2,000,000
   b. Products (Completed Operations Aggregate): $1,000,000
   c. Personal and Advertising:
      Injury: $1,000,000
      Each Occurrence
      (Bodily Injury and Property "Damage): $1,000,000
   d. Property Damage liability insurance will provide Explosion, Collapse, and Underground coverages where applicable
   e. Excess or Umbrella Liability
      General Aggregate: $2,000,000
      Each Occurrence: $1,000,000
3. Automobile Liability:
   a. Bodily Injury:
      Each person: $1,000,000
      Each Accident: $1,000,000
   b. Property Damage:
      Each person: $1,000,000
      Combined Singled Limit of: $1,000,000

The Contractor shall deliver to RUSA, with copies of each additional insurance identified in these Special Provisions, certificates of insurance (and other evidence requested by RUSA or any other additional insured) which Contractor is required to purchase and maintain.

If RUSA has any objection to the coverage afforded by or other provision of the insurance required to be purchased and maintained on the basis of nonconformance with the Contract Documents, RUSA shall notify Contractor in writing within 10 days after receipt of the certificates or other evidence required by this Agreement. Contractor shall provide such additional information in respect to insurance as RUSA shall reasonably request.

00170.70(c) Additional Insured - Add the following paragraph and bullets to the end of this subsection:

Add the following as Additional Insureds under the Contract:

- Leeway Engineering Solutions, LLC
- Murraysmith, Inc.

SECTION 00180 - PROSECUTION AND PROGRESS

Comply with the RUSA General Conditions and Section 00180 of the Standard Specifications modified as follows:

00180.40(b) On-Site Work - Add the following to the bulleted list:

- Produce and deliver door hanger notifications no more than 48 hours and no less than 24 hours in advance of construction activities on a given street. Delivery of door hangers shall be done at the same time No Parking signs are first placed in the Work area.

00180.40(c) Private Property Access and Work in Easements - Add the following subsection:

Close coordination and scheduling shall be required between the Contractor and the property owner when replacing private service lines. The exact location of the private service lines are unknown. The service lines drawn on the plans represent a possible or general location. It is the Contractors responsibility to replace the service line as shown or noted on the plans.
Locations of service lines may be moved or relocated as required to minimize the disruption to the homeowner.

All work affecting private property shall require a minimum of 7 calendar day written notice, by the Contractor to RUSA and the property owner, showing the proposed starting date and the order and duration of the work.

The Contractor shall confine its operations to within the public street right-of-way or permanent easement in accordance with Section 00444. The Contractor shall repair any damage to private property, either inside or outside of any easement limits, caused by the Contractors operations.

00180.41 Project Work Schedules - After the paragraph that begins "One of the following Type…" add the following paragraph:

In addition to the "look ahead" Project Work schedule, a Type C schedule as detailed in the Standard Specifications is required on this Contract.

00180.50(h) Contract Time – There is one Contract Times on this Project as follows:

(1) The Contractor shall complete all Work to be done under the Contract not later than June 15, 2021.

00180.85 Failure to Complete on Time; Liquidated Damages - Replace this subsection, except for the subsection number and title, with the following:

(a) Time is of the Essence - Time is of the essence in the Contractor's performance of the Contract. It is essential and in the public interest that the Contractor prosecute the Work vigorously to Contract completion and within Contract Time or adjusted Contract Time.

The Agency does not waive any rights under the Contract by permitting the Contractor to continue to perform the Contract, or any part of it, after the Contract Time or adjusted Contract Time has expired.

(b) Liquidated Damages - Delays in the Contractor's performance of the Work will cause RUSA to sustain damages; increase risk to, inconvenience, and interfere with the traveling public and commerce; and increase costs to rate payers. Because RUSA finds it is unduly burdensome and difficult to demonstrate the exact dollar value of such damages, the Contractor agrees to pay to RUSA, not as a penalty but as liquidated damages, the amount(s) determined as specified below for each Calendar Day the Work remains incomplete after the expiration of the Contract Time or adjusted Contract Time applicable to that Work. The liquidated damages shall constitute payment in full only of damages incurred by RUSA due to the Contractor's failure to complete the Work on time.

Payment by the Contractor of liquidated damages does not release the Contractor from its obligation to fully and timely perform the Contract according to its terms. Nor does acceptance of liquidated damages by RUSA constitute a waiver of RUSA's right to collect any additional damages it may sustain by reason of the Contractor's failure to fully perform the Contract according to its terms.

If the Contract is terminated according to 00180.90(a), and if the Work has not been completed by other means on or before the expiration of Contract Time or adjusted Contract Time, liquidated damages will be assessed against the Contractor for the duration of time reasonably required to complete the Work.

Liquidated damages will be assessed per Paragraph 11 of the Bid Form.

SECTION 00190 - MEASUREMENT OF PAY QUANTITIES

Comply with the RUSA General Conditions and Section 00190 of the Standard Specifications.

SECTION 00195 - PAYMENT

Comply with the RUSA General Conditions and Section 00195 of the Standard Specifications.

SECTION 00196 - PAYMENT FOR EXTRA WORK

Comply with the RUSA General Conditions and Section 00196 of the Standard Specifications modified as follows:

00196.20 Force Account - Replace this subsection, except for the subsection number and title, with the following:

If the Engineer and the Contractor cannot agree on a price for the Extra Work, the Engineer may issue an Extra Work order requiring the Extra Work to be paid as Force Account Work. Force Account Work records and payment will be made according to Section 00197.

SECTION 00197 - PAYMENT FOR FORCE ACCOUNT WORK

Comply with the RUSA General Conditions and Section 00197 of the Standard Specifications.

SECTION 00199 - DISAGREEMENTS, PROTESTS, AND CLAIMS

Comply with the RUSA General Conditions and Section 00199 of the Standard Specifications.

SECTION 00210 - MOBILIZATION

Comply with Section 00210 of the Standard Specifications.

SECTION 00220 - ACCOMMODATIONS FOR PUBLIC TRAFFIC

Comply with Section 00220 of the Standard Specifications modified as follows:

00220.00 Scope - Add the following to the end of this subsection:

The Contractor shall be responsible for maintaining smooth flow of traffic around construction activities. All traffic control will be in accordance with an approved traffic plan. The Contractor shall submit to the jurisdictional authority for approval, a written traffic control plan 14 calendar days before the preconstruction conference. No work shall commence prior to the approval of the traffic control plan by the jurisdictional authority. During the performance of the work, the Contractor shall submit any proposed revisions to the plan for the jurisdictional authority approval. The Contractor shall not block driveways or intersections, unless otherwise described under Section 00220.02, or unless otherwise authorized in writing by the jurisdictional authority. The Contractor shall, on a daily basis, inform any and all impacted property owners and RUSA of any work affecting access to private property.

00220.02 Public Safety and Mobility - Add the following bullets to the end of the bullet list:

- Contractor shall coordinate construction activities with adjacent property owners and businesses to maintain driveway access and parking lot mobility at all times.
- Contractor shall allow unrestricted vehicle and pedestrian access to all properties outside the allowable working hours and shall protect the work zone as required.
- Do not stop or hold pedestrians on the sidewalk or temporary pedestrian route for more than 5 minutes.

00220.03 Work Zone Notifications - Add the following to the end of this subsection:

(c) Permitting and Public Notification - Obtain a City of Roseburg and Douglas County Public Works Street Closure Permit for all lane, shoulder or sidewalk closures prior to closing. Obtain permit at least 7 days in advance of actual closure.

- RUSA will provide general notification through the news media of the scope of the project. However, the Contractor shall provide a minimum of seven days' notice to each property owner who is affected by the temporary interruption of their access, one way restrictions, detours, temporary road closures, restricted parking, etc. It shall be the Contractor's responsibility to provide written and verbal notice to each property owner, resident, or business manager whose access is restricted or limited.

- It shall be the Contractor's responsibility to contact all emergency responding facilities such as, but not limited to, City and/or County police, City and/or County fire department and ambulance services before any one way or detour routes are established.

The Contractor shall produce and deliver door hanger notifications to properties within the project area. The door hanger will contain information generated and gathered at the preconstruction conference, including the following information:

- General project information
- Contractor's company name and telephone number
- RUSA's logo
- Appropriate phone numbers for the public to contact for questions and/or additional information
- A schedule of the project with the dates and times listed
- An explanation of the impact that the construction will have on street usage (e.g., no parking, street closures, detours, etc.)
- Alternate routes to all properties abutting the project street with specific instructions to those properties that the primary access/outlet is located on the project street.

Door hangers shall be distributed by the Contractor no more than 48 hours and no less than 24 hours before the commencement of work. Distribution of door hangers shall be done at the same time No Parking signs are first placed in the area. Every effort shall be made to attach the door hanger to the front door of every dwelling. Door hangers are not to be left in or on mailboxes or parked cars. Each unit or tenant of any apartment building(s), office(s), commercial unit or any other structure that may have multiple tenants shall receive a door hanger notice. All properties that have a primary outlet/access to the scheduled street shall receive a door hanger. Door hangers shall be removed by the Contractor within one day of street completion or rescheduling of construction.

In the event of a significant schedule change, door hangers shall be redelivered with the revised work dates/times 24 hours before significant street impacts. Work may be not allowed if timely notification has not been provided.

Notify emergency services and organizations listed in Section 00150.50(f) a minimum of 10 calendar days in advance of any street closures.

00220.40(e-1) Closed Lanes - Replace this subsection, except for the subsection number and title, with the following:

All other work:

One or more Traffic Lanes may be closed on Hooker Road, General Ave, and Aviation Dr, when allowed, shown, or directed during the following periods of time except as indicated in 0220.40(e-2). Maintain one lane of traffic in each direction.

- Daily, Monday through Thursday between 9:00 a.m. and 4:00 p.m.
- Friday between 9:00 a.m. and 3:00 p.m.

00220.40(e-2-b) Special Events – Add the following to the end of this subsection:

The following special events will occur during this Project:

- N/A

The Contractor shall verify the dates of special events.

00220.40(e-1) Closed Lanes - Replace this subsection, except for the subsection number and title, with the following:

Maintain local access on City and County streets at all times. At both ends of a City and a County street being closed, install “ROAD CLOSED TO THRU TRAFFIC” (R11-4) signs with other required traffic control measures. In a situation where a street leads to the actual street of closure and there are no outlets (e.g. vehicles would have to turn around at the closure), install a “ROAD CLOSED AHEAD / LOCAL TRAFFIC ONLY (R11-3a) at the nearest intersection.

When City or County street closures are allowed, provide a minimum 7 calendar day advance notification to organizations listed in Section 00150.50(f).

SECTION 00225 - WORK ZONE TRAFFIC CONTROL

Comply with Section 00225 of the Standard Specifications modified as follows:

00225.01(b) Definitions - Replace the "Traffic Control Plan" definition with the following definition:

Traffic Control Plan - A written and drawn plan used to describe traffic control measures for facilitating road users through or around a work zone area, while offering protection for workers and incident responders.

Add the following definition:

Protection Vehicle - A vehicle placed in advance of short-duration or mobile work activities for the protection of workers and equipment in the activity area. A protection vehicle is equipped with flashing warning lights, and vehicle-mounted warning signs or a changeable message sign. A protection vehicle may be fitted with a truck mounted impact attenuator.

00225.01(c) Standards - Replace the bullet list with the following bullet list:

- Oregon Department of Transportation's "Sign Policy and Guidelines for the State Highway System"
- The Manual on Uniform Traffic Control Devices (MUTCD)
- The latest versions of the 1990 Americans with Disabilities Act (ADA), and the Public Right of Way Accessibility Guidelines (PROWAG).
- FHWA "Standard Highway Signs" manual
- ODOT "Oregon Temporary Traffic Control Handbook for Operations of 3 Days or Less" when directed by the Engineer only for mobile pavement marking operations or surveying work, available on the ODOT Traffic Control Plans Unit Website
- ODOT "Oregon Portable Changeable Message Sign Handbook", available on the ODOT Traffic Control Plans Unit website
- ODOT "Traffic Control Plans Design Manual", available on the ODOT Traffic Control Plans Unit website.

00225.02 General Requirements - In the paragraph that begins "Work may be suspended…", replace the sentence that begins "Costs for work performed…" with the following sentence:

Costs for work performed by the Agency may be deducted from monies due the Contractor. Add the following to the end of this subsection:

Install beyond each end of the Project, facing outgoing traffic, an "END ROAD WORK" (CG20-2A-24) sign a distance of (A ÷ 2) according to the "TCD Spacing Table" shown on the standard drawings or as modified by the supplemental drawings.

Replace the paragraph that begins, "Do not use an open traffic lane on a freeway…" with the following paragraph:

Do not use an open Traffic Lane on a freeway or multi-lane facility as an acceleration or deceleration lane for construction vehicles. Provide additional surfacing or width within the work area or, if allowed, extend the length of a closed Traffic Lane for construction vehicle acceleration or deceleration. Do not use a flagger to allow construction vehicles to access an open traffic lane on a freeway or a multi-lane facility.

00225.10 General - In the paragraph that begins "Evaluate the condition…", replace the first sentence with the following sentence:

Evaluate the condition of TCD using the criteria shown in the most current version in effect of the American Traffic Safety Services Association (ATSSA) publication titled "Quality Guidelines for Temporary Traffic Control Devices and Features", available from the ATSSA website at www.atssa.com.

00225.11(c-1) Temporary Signs - Replace the bullet that begins "Type 2 riprap geotextile…" with the following bullet:

- Geotextile fabric

00225.13(a) Tubular Markers - Add the following to the end of this subsection:

Use blue plastic markers for temporary business accesses only. Use orange plastic markers for all other applications of work zone traffic control.

Blue plastic tubular markers shall be reflectorized with at least two blue, flexible reflective bands at least 3 inches wide, securely attached no more than 2 inches from the top with no more than 6 inches but not less than 1 inch between the bands.

00225.17 Flagger Station Lighting - Add the following paragraph to the end of this subsection:

In addition to the products listed on the QPL, tripod mounted or cart mounted flagger station lights that were purchased on or before January 1, 2014 and that were on the QPL before January 1, 2014 may also be used. Provide proof of the original purchase date to the Engineer.

00225.27(a) Flagger Equipment - Replace the bullet that begins "Portable, self-contained two-way…" with the following bullet:

- Portable, self-contained two-way radio and repeaters, as required, with a range suitable for communications throughout each work zone, unless otherwise directed.

00225.32 Traffic Control Supervisor -

In the paragraph that begins "The TCS duties include the…", replace the first two bullets with the following bullets:

- Monitor work zone traffic control measures, operations, activities, and conditions, including lane closures, lane or traffic shifts, detours, flagging operations, rolling slowdowns, and temporary traffic signal work.
- Review all applicable requirements of the Contract to ensure the convenience, safety and orderly movement of motor vehicle, bicycle, and pedestrian traffic.

In the paragraph that begins "The TCS duties include the…", replace the bullet that begins "Submit stamped working drawings that include…" with the following bullet:

- If the Contractor is using a modified Agency TCP or not using the Agency TCP, ensure stamped working drawings that include the revisions are submitted according to 00225.05 and 00150.35.

In the paragraph that begins, "The TCS duties include the…", replace the bullet that begins "Provide supervision and oversight…" with the following bullet:

- Provide oversight in maintaining all TCM on the Project Site.

00225.41(b-4) Temporary Sign Supports - Replace the bullet that begins "Do not tip over TSS…" with the following bullet:

- When signs are needed at a single location for more than 48 consecutive hours.
- When not practicable to post mount due to location or when utility conflicts exists.
- Do not tip over any TSS that is exposed to traffic, unless approved by the Engineer or the TSS is protected from traffic by a barrier system.
- Position TSS as shown on the standard drawing or in the TCP.
- When not in use, locate TSS as far from public traffic as practicable and turn away from traffic, or cover the sign. Do not cover reflective sheeting on the TSS posts.

00225.41(c) Sign Flag Boards and Sign Flags - Replace this subsection, including subsections 00225.41(c-1) and 00225.41(c-2), with the following subsection:

00225.41(c) Sign Flag Boards - Install two sign flag boards, as shown or specified.

00225.41(e) Inconsistent Temporary Signs - Replace the paragraph that begins "Ensure that all temporary…" with the following paragraph:

Ensure that all temporary signs are properly used and consistent with the work zone. Cover all inconsistent temporary signing until the sign messages are applicable to the Work that is beginning. When signage is no longer required for staging or shift Work, remove all temporary signs, sign flag boards, supports, sign covers, and ballast associated with the staging or shift Work.

00225.43(e) Pavement Markers - Replace the paragraph that begins "Temporary pavement markers shall…" with the following paragraph:

Temporary pavement markers shall remain in place until the permanent markings are complete. Replace damaged or missing markers when directed by the Engineer. On the final pavement wearing course and along final alignment, place permanent markings a maximum of 28 Calendar Days after placing temporary pavement markers, or as directed.

00225.43(g) Temporary Pavement Markings - Replace the paragraph that begins "Before opening roadways to traffic, unless…" with the following paragraph:

Before opening roadways to traffic, unless otherwise specified in 00225.43(h), apply temporary pavement markings on pavement base courses, wearing courses, and new bridge deck surfaces at locations shown, or as directed. Immediately remove all unacceptable pavement markings and replace with acceptable markings before opening roadways to traffic and at no additional cost.

SECTION 00280 - EROSION AND SEDIMENT CONTROL

Comply with Section 00280 of the Standard Specifications modified as follows:

0280.90 Payment - Replace pay item (r) with the following pay item:

(r) Inlet Protection, Type _____ ..... Each

Add the following paragraph after the paragraph that begins "Item (b) includes protecting…":

In item (r), the type will be inserted in the blank.

Add the following paragraph to the end of this subsection:

No separate or additional payment will be made for constructing laps, seams, joints, wraps, overlaps, joint overlaps, or patches unless the Engineer orders additional amounts in excess of the minimum. For laps, wraps, or overlaps that that have been ordered by the Engineer and exceed the minimum or specified length or width, payment will be made for the added lap, overlap, or wrap length or width at the Contract unit price.

SECTION 00290 - ENVIRONMENTAL PROTECTION

Comply with Section 00290 of the Standard Specifications modified as follows:

00290.30(b) Pollution Control Plan- Add the following bullet to the end of the bullet list:

- Before commencing work on the sanitary sewer system, the Contractor shall produce a preliminary and final sanitary wastewater spill response plan, as part of the project Pollution Control Plan. Two copies of the preliminary plan shall be given to RUSA for review. The Contractor shall incorporate RUSA comments into the preliminary plan and produce a final plan. The Contractor shall give RUSA three copies of the final plan.

  The plan shall detail the Contractor's proposed methods for preventing a sanitary wastewater spill and shall detail the Contractor's proposed methodology for containing and cleaning up a spill if such should occur. The Contractor shall immediately report all spills to RUSA and to the Oregon DEQ. A spill is defined as the release of wastewater to an area not contained within the sanitary sewer system.

00290.32 Noise Conrol - Replace the bullet that begins "Do not perform construction within 1,000 feet…" with the following bullet:

- Do not perform construction within 1,000 feet of an occupied dwelling on Sundays, legal holidays or between the hours of 6:00 p.m. and 7:00 a.m. on other days, without the approval of the Engineer.

SECTION 00305 - CONSTRUCTION SURVEY WORK

Section 00305, which is not a Standard Specification, is included for this Project by Special Provision.

Description

00305.00 Scope - Provide construction survey work according to the current edition on the date of Advertisement, of the ODOT "Construction Surveying Manual for Contractors". This manual is available on the web at:

http://www.oregon.gov/ODOT/HWY/GEOMETRONICS/Pages/documents.aspx

Measurement

00305.80 Measurement - No measurement of quantities will be made for construction survey work.

Payment

00305.90 Payment - The accepted quantities of construction survey work will be paid for at the Contract lump sum amount for the item "Construction Survey Work".

Payment will be payment in full for furnishing all material, equipment, labor, and incidentals necessary to complete the work as specified.

No separate or additional payment will be made for any temporary protection and direction of traffic measures including flaggers and signing necessary for the performance of the construction survey work.

No separate or additional payment will be made for preparing surveying documents including but not limited to office time, preparing and checking survey notes, and all other related preparation work.

Costs incurred caused by survey errors will be at no additional cost to the Agency. Repair any damage to the Work caused by Contractor's survey errors at no additional cost to the Agency. The Engineer may make an equitable adjustment, which may decrease the Contract Amount, if the required survey work is not performed.

SECTION 00310 - REMOVAL OF STRUCTURES AND OBSTRUCTIONS

Comply with Section 00310 of the Standard Specifications modified as follows:

00310.92 Separate Item Basis - Replace this section with the following:

Pay Item	**Measurement**
(a) Removal of Manholes……..	Each

Item (a) does not include manholes removed for the installation of a new manhole. Removal of manholes will only be paid for where it is called out on the plans.

SECTION 00320 - CLEARING AND GRUBBING

Comply with Section 00320 of the Standard Specifications modified as follows:

00320.40(b) Preserving and Trimming Vegetation - Replace this subsection with the following subsection:

00320.40(b) Preserving Vegetation and Other Natural Materials:

(1) Within the Work Areas - Avoid injuring vegetation or other natural materials designated to be saved. Preservation of this vegetation includes protection and special care.

(2) Outside the Work Areas - Avoid injuring vegetation or other natural materials. Confine operations which may injure vegetation or other natural materials to the work area or to areas that have already been cleared.

00320.90 Payment - Replace the paragraph that begins "No separate or additional payment…" with the following paragraph:

No separate or additional payment will be made for work zone fencing.

SECTION 00330 - EARTHWORK

Comply with Section 00330 of the Standard Specifications modified as follows:

00330.03 Basis of Performance - Add the following paragraph to the end of this subsection:

Perform all earthwork under this Section on the excavation basis.

00330.41(a-9) Excavation Below Grade - Delete subsection 00330.41(a-9-c).

00330.80 Measurement - Replace this subsection, except for the subsection number and title, with the following:

No measurement will be made for this work, as it is considered incidental to other work on this project.

00330.90 Payment - Replace this subsection, except for the subsection number and title, with the following:

No payment will be made for this work, as it is considered incidental to other work on this project.

00330.92 Kinds of Incidental Earthwork - Add the following bullets to the end of the bullet list:

- Excavation of all curbs, curbs and gutters, walks, surfacings, surface visible concrete panels, aggregate, and earth.
- Saw cutting as directed or may be needed to complete earthwork.

SECTION 00331 - SUBGRADE STABILIZATION

Comply with Section 00331 of the Standard Specifications.

SECTION 00340 - WATERING

Comply with Section 00340 of the Standard Specifications.

SECTION 00405 - TRENCH EXCAVATION, BEDDING, AND BACKFILL

Comply with Section 00405 of the Standard Specifications modified as follows:

00405.02 Definitions - Add the following definition:

Pothole Excavation - Pothole excavation is the removal and replacement of all materials via coring, vacuum extraction, or similar method, not classified as Exploratory Excavation, for the purposes of locating an underground utility and to investigate underground conditions.

SECTION 00408 – LATERAL LINING

Section 00408, which is not a Standard Specification, is included in this Project by Special Provision.

Description

00408.00 Scope - This work consists of rehabilitating existing lateral sewer pipes by furnishing and installing pipe liners by cured-in-place pipe methods.

00408.01 Definitions:

Cured-In-Place Pipe (CIPP) - Inserting a resin-impregnated tube into an existing pipe, expanding it, and curing it to form a new lined pipe in accordance with ASTM F1216, ASTM F1743, or ASTM F2561.

End Seal – Hydrophilic, continuous O-rings to seal the ends of the CIPP with the existing mainline or lateral host pipe and prevent future infiltration or fines migration.

One Piece Main and Lateral Liner – A watertight, one-piece CIPP connection at the interface of the mainline and lateral pipelines that extends into the lateral and includes end seals on the sewer mainline wrap and at the end of the lateral liner per ASTM F2561.

Lateral Liner - Lateral lining that rehabilitates the lateral only and includes integrally-connected hydrophilic seals on each end of the lateral CIPP.

00408.02 Submittals - Submit the following in a single package, in accordance with 00150.35, prior to starting work:

(a) Certification – Certification from the liner system manufacturer that the installer is fully licensed and competent to perform the work.

(b) Comprehensive Installation Plan – Plan that identifies manufacturer's guidelines and procedures for storage, shipping and resin impregnation, pipe line cleaning and preparation, installation procedures, minimum and maximum installation pressures and temperature monitoring procedures. Include a liner shot plan. Identify quality control measures. Provide liner control sheets that include:

- Liner manufacturer
- Liner diameter
- Number of layers
- Resin amount
- Resin type
- Resin manufacturer
- Batch number
- Hardener name
- Batch number
- Mixing ratios
- Vacuum pressure of impregnation process
- Wet-out start time and date.
- Inversion temperature.

(c) End Seal – Product data on end seal material to be used and method of installation.

(d) Physical Properties - Certified test reports demonstrating that the exact resin/liner combination to be used meets the requirements for chemical resistance, initial and long-term structural properties (in accordance with ASTM F1216, ASTM D790 and ASTM D2990).

(e) Diversion of Flow – Flow diversion plan, including all mainline pipe and service laterals, in accordance with 00490.

(f) Liner Repair Plan - Methods and equipment for repairing unacceptable liner defects, removing failed liners, and the availability and accessibility of backup equipment such as air compressors and boilers.

(g)Grout Sealing - If a grout sealing method is proposed, provide certification from the grout manufacturer or supplier that the grout material for sealing structures and service laterals is compatible with the proposed resin and liner system and is suitable for use in aqueous environments.

(h)Installation Documentation – Post-installation report for resin impregnation of each CIPP lateral tube. Include a copy of the installation checklist, inversion control sheet and curing log of CIPP temperature and pressure during the curing process. Submit installation documentation weekly.

For water Inversion, include:

- Liner length
- Hydrostatic head at point of inversion
- Hydrostatic head at termination point
- Time when inversion process starts
- Time when curing begins and ends

For air inversion, include:

- Liner length
- Minimum pressure
- Maximum pressure
- Time and pressure when inversion process started and every ten minutes until inversion process completes
- Time when curing begins and ends

(i) Limited Access Private Property Construction Method and Plan – Submit method of construction access, equipment, and measures to protect landscaping and surfaces from damage during lateral construction or rehabilitation. Submit documentation describing ingress, excavation, restoration, and egress.

00408.03 Design Parameters - Install lateral CIPP to the following thicknesses:

Lateral Nominal Diameter	CIPP Thickness
4-inch	3.0 mm (4.5mm maximum)
6-inch	4.5 mm
8-inch	6.0 mm

If a thinner CIPP is proposed, submit design calculations demonstrating reduced thicknesses using the following design parameters.

Condition	Parameter
Service Life	Greater than 50 years
Lateral Pipe Conditions	Fully Deteriorated
Mainline Pipe Conditions	Partially Deteriorated
Load Conditions	Continuous
Soil	110-pound/cubic-foot; Use the depth of the upstream or downstream manhole on that pipe segment, whichever is deeper
Traffic	HS-20
Groundwater Elevation	Ground Surface; Use the depth of the upstream or downstream manhole on that pipe segment, whichever is deeper
Pipe Ovality	3%
Modulus of Soil Reaction	700 psi
Enhancement Factor	7.0
Long-term	
Flexural Strength	95%* of Initial (ASTM D790)
Modulus of Elasticity	50%* of Initial (ASTM D790)
Poisson's Ratio	0.3
Dimension Ratio	55 minimum
Design Safety Factor	2.0

*If long-term test results are used for flexural strength and modulus of elasticity, provide independent third party test data of the proposed liner performed in accordance with ASTM D790 and ASTM D2990 as evidence of the values used in design. Extrapolate the data points from 1,000 hours to 10,000 hours of the Long-term Flexural Modulus using a log-log scale linear regression analysis to determine the minimum service life performance of the resin-tube.

Materials

00408.10 Tube - Furnish a resin-impregnated, non-woven flexible polyester felt, or equivalent material tube which is inserted into the lateral and cured-in-place by an approved method. Use a tube with polyurethane or polyethylene membrane coating suitable for protecting the interior surface and for providing a uniform, smooth flow surface. The tube must be capable of conforming to offset joints, bells and deformed pipe sections up to 20 percent of original pipe diameter. Liner transitions in diameter should match field conditions.

Use the T-Liner ®, as manufactured by LMK Technologies, or approved equal.

00408.11 Resin - Use a liquid thermosetting resin suitable for the specific design conditions and curing process. The resin must be a corrosion resistant polyester, vinyl ester, or epoxy, as recommended by the liner manufacturer. Resin must saturate the tube and produce a hard CIPP which is resistant to abrasion due to solids, grit, and sand, and chemically resistant per ASTM F1216.

00408.12 Liner Properties - No film or plastic membrane between the inner surface of the existing lateral and the resin-filled felt CIPP. The finished CIPP shall have the following minimum properties:

Characteristic	Test Method	Polyester Resin
Initial Flexural Strength	ASTM D790	2,500 psi
Initial Flexural Modulus of Elasticity	ASTM D790	250,000 psi (min)

Labor

00408.30 Personnel - Use installers who are qualified, licensed, and certified by the manufacturer of the lateral CIPP product system. Use an installer who has installed the specified lateral lining product on at least 30 laterals in the last three years using the proposed curing method.

Construction

00408.40 General - Work limits shall comply with 405.41(b).

If mainline is rehabilitated using CIPP, install the lateral CIPP liner after successful installation and acceptance of mainline CIPP.

Take care in shipping, handling and storage to avoid damaging the liner. Adequately support and protect the CIPP components while stored. Store CIPP components in a manner as recommended by the manufacturer and as approved. Verify condition of the liner with the Owner's Representative prior to installation. Replace torn, cut or otherwise damaged portions of the liner, before or during installation before proceeding with installation.

Account for any necessary allowances in longitudinal and circumferential expansion when sizing and installing the liner.

No change of material, design values, or procedures may be made during the course of the Work without the prior written approval.

00408.42 Sewer Bypassing - Provide and install Sewer Bypassing according section 00490.

00408.43 Lateral Cleanouts - When shown, locate and install cleanouts on existing laterals per 00445 and standard detail.

00408.44 Pre-Construction Lateral Inspection - Perform pre-construction inspection of laterals according to 00401. Inspect and confirm the inside diameter, alignment, length, and condition of each lateral to be lined. Field-measure lateral diameters, including transitions in lateral diameters, and identify exact locations of fittings and bends. Field-verify all dimensions prior to manufacture and delivery of the liner tube. Notify the Owner's Representative if unanticipated physical conditions in the work area are discovered during the investigation, or if the ovality of the host lateral exceeds 5%.

Immediately prior to CIPP lining, inspect the lateral again to verify that the lateral is clean and free of roots, grease, sand, rocks, sludge, infiltration, or structural impediments that would affect the installation or long-term viability of the lateral liner. Notify the Owner's Representative a minimum of 5 working days prior to the scheduled lateral inspection and lining installation.

If a defect or obstruction prevents the successful installation of the lateral liner and that the defect cannot be addressed trenchlessly, the Owner's Representative may determine that lateral lining is not feasible and that open-cut or some other lateral rehabilitation methodology is required .

00408.45 Lateral Preparation - Clean laterals and mainline sewer prior to lining, such that the pipes are free of roots, grease, sand, rocks, sludge and other debris. Clear the mainline of obstructions such as solids, roots, or broken pipe that will prevent the insertion of the liner.

Prior to liner installation, prepare the host pipe to a condition suitable for CIPP lining. Preparation includes stopping active infiltration, cleaning, debris removal, and performing open-cut spot repairs.

00408.46 Resin Impregnation - Encapsulate the tube for the mainline and/or lateral within the translucent bladder and saturate it with resin in accordance with the manufacturer's instructions.

00408.47 Plugging - Plug the upstream side of the cleanout during insertion and curing of the liner assembly to ensure no flows enter the pipe and no air, steam, or odors enter the building.

00408.48 Installation

General – Form the sewer mainline portion of the lateral CIPP liner to the inside of the mainline sewer for the entire circumference of the mainline sewer. Extend this portion a minimum of 5 inches on each side of the tap. Extend the length of the lateral portion of the lateral liner to the curb unless otherwise approved. Provide two rows of properly trimmed end seals at each end of the mainline portion of the lateral liner or a mainline-lateral connection hydrophilic compression seal.

Completely protect the resin-saturated lateral tube during positioning and installation. Do not allow resin loss by contacting manhole walls or pipe.

(a) Pipe Liner End Seal – Install a continuous or properly trimmed end seal between the ends of the new pipe liner and the host pipe connection. Install the end seal at the cleanout end of the lateral liner within 12-inches of the cleanout stack.

(b) Inversion - Insert lateral CIPP liner into lateral in accordance with manufacturer's instructions. Provide a means of controlling the speed of inversion of the liner/bladder assembly, and a means of ensuring that positive pressure is not created in the service lateral pipe.

(i) Water Inversion - Complete an installation process control sheet for every lining completed.

(ii) Air Inversion - Provide the minimum pressure required to hold the tube tight against host pipe and maximum pressure allowable to not damage the tube. Maintain the pressure between the recommended pressure ranges until inversion is complete. Remove the installed Lateral CIPP liner if the pressure deviates from within this range. Complete an installation process control sheet for every lining completed.

(c) Curing and Cool Down - After insertion is complete and the end seals are in place apply pressure to the lateral using a recirculation system capable of delivering air, steam, or water, as required by the liner system manufacturer, uniformly throughout the section to achieve a consistent cure of the resin. Maintain the curing temperature as recommended by the liner system manufacturer. Prevent excessive temperatures that could scald or bubble the liner. Monitor and log the heat source temperatures and during the cure and cool down cycles.

Initiate a controlled cool-down process when curing is complete. Cool the hardened pipe to a temperature in accordance with resin manufacturer's recommendation before relieving the static head or pressure in the lined pipe and returning normal flow back to the system. Take measures to release the pressure so that a vacuum will not develop and damage the newly installed CIPP system.

Finishing and Clean Up

00408.70 General - Remove all installation and curing equipment from the host pipe once the curing process is complete. No material other than the cured CIPP is allowed in the host pipe. Remove any excess liner material protruding into sewer main or manhole by remote robotic cutting equipment or manual means, in accordance with manufacturer's instructions. Provide a finished CIPP that is continuous and free as commercially practicable of visual defects such as foreign inclusions, dry spots, pinholes, delamination, and wrinkles in any location in excess of 10 percent of the host pipe inside diameter.

00408.71 Visual Inspection - Conduct post-construction inspection in accordance with Section 00401.

00408.72 CIPP Acceptance - Acceptance of the CIPP lateral liner is based on the Owner's evaluation of the resin impregnation quality control reports, CIPP temperature curing logs, and post-construction inspection video. Conditions of acceptance include, but are not limited to, the following:

- Liner is continuous in length
- Liner thickness is uniform and within -10% and +15% of the required thicknesses.
- No observed infiltration
- All active service connections are open, clear, and watertight
- No evidence of excessive wrinkles, cracks, lifts, scalds, blisters, or delamination
- Liner is fitted tightly to the host pipe

The existing host pipe may have irregularities, such as offset joints, protrusions, bumps, and deformations. If the irregularities remain after the sewer has been prepared in accordance with the Contract Documents, exception(s) to the conditions of acceptance may be allowed.

Remove defective CIPP liner and replace it with either a sound liner or a new lateral as directed. The method of repair may require field or workshop demonstration.

00408.73 Cleaning - After each phase of liner installation clean the entire project area and restore the site to its original condition or better. Dispose of excess material and debris not incorporated into the permanent installation.

Measurement

00408.80 Measurement - The quantities of laterals rehabilitated with CIPP will be measured on the unit basis, per each, by actual count of accepted laterals with successfully installed CIPP.

00408.81 CIPP Laterals Over 12 Feet Long - Measurement for lateral lengths rehabilitated with CIPP that are longer than 12 feet will be made on a foot basis for each additional foot of lateral beyond 12 feet as measured from the connection at the main to the end of the lateral liner, rounded up to the nearest foot.

Payment

00408.90 Payment - The accepted quantities of work performed under this Section will be paid for at the Contract unit price, per unit of measurement for the following items:

Pay Item	Unit of Measurement
(a) One Piece Main and Lateral Liner, Lateral, 0 to 12 Ft	Each
(b) One Piece Main and Lateral Liner, Lateral, Each additional foot	Foot

Payment will be payment in full for cleaning, inspecting, and preparing the lateral for lining, furnishing and installing lateral CIPP, any excavation and backfill, final restoration, final post-construction inspection, and incidentals necessary to complete the work as specified.

Sewer Bypassing will be paid according to Section 00490.

Cleanouts will be paid according to Section 00445.

No separate or additional payment will be made for:

- Pre-construction video inspections or post-construction video inspection.
- Replacing or repairing damaged liner, as described in Sections 00408.40 and 00408.72
- Disposing of excess material and debris, as described in 00408.73
- Installation of a cleanout if the cleanout is not shown on the Drawings and the cleanout is installed for the installation of the lateral CIPP or solely for the convenience of the Contractor.
- Surface restoration (e.g. lawn seeding, topsoil, vegetation, concrete sidewalk, concrete curb, concrete driveway, and/or pavement)

SECTION 00410 - COMMON PROVISIONS FOR PIPE LINING

Comply with Section 00410 of the Standard Specifications.

SECTION 00411 - PIPE BURSTING AND SLIP LINING

Comply with Section 00411 of the Standard Specifications modified as follows:

00411.42 Installation – Add the following to the end of subsection (a) Pipe bursting:

Pothole to the top of all gas lines within 20" of the existing pipe before Pipe bursting, and leave open until the Pipe Burst is complete.

SECTION 00412 - CURED-IN-PLACE PIPE LINING

Comply with Section 00412 of the Standard Specifications modified as follows:

00412.02 Design Parameters - Add the following to the end of this subsection:

The following design parameters apply:

Condition	Parameter
Load Conditions:	
Soil	120 pounds per cubic foot
Traffic	H-20 Traffic Loading
Groundwater Elevation	Ground Level
Pipe Ovality	5 percent minimum
Modulus of Soil Reaction	700 pounds per square inch

00412.42 Service Line Reconnection – Replace this subsection with the following subsection:

Reconnect all service lines unless noted otherwise in the plans. Open hole to a minimum of 95 percent, but not exceed 100 percent of the service lateral diameter. Make each connection free from burrs or projections, and with a smooth and crack-free edge.

00412.72 Repairs – Add the bullet beginning with the sentence "Leakage through the liner…" with the following bullet:

- Any detectable leakage through the liner.

00412.90 Payment – Add the following pay item:

Pay Item	Unit of Measurement
(c) Internal Service Lateral Reinstatement	Each

SECTION 00413 - GRP CURED-IN-PLACE PIPE LINING & UV CURE

Comply with Section 00413 of the Standard Specifications modified as follows:

00413.02 Design Parameters - Add the following to the end of this subsection:

The following design parameters apply:

Condition	Parameter
Load Conditions:	
Soil	120 pounds per cubic foot
Traffic	H-20 Traffic Loading
Groundwater Elevation	Ground Level
Pipe Ovality	5 percent minimum
Modulus of Soil Reaction	700 pounds per square inch

SECTION 00415 - VIDEO PIPE INSPECTION

Comply with Section 00415 of the Standard Specifications modified as follows:

00415.40 General Video Inspection – Modify as follows:

(f) Recording Format and Labeling Replace the subsection with the following

(a) Mainline Pipe

The inspection video shall be saved in a digital format and given to RUSA on a USB flash drive in MP4 format. The digital file for each video recording shall be saved with a file name corresponding to the mainline inspection from manhole number to manhole number.

(b) Laterals

The Contractor shall use close circuit television to inspect the condition of all existing service lines. The lines shall be cleaned prior to television inspection if required. The inspection video shall be saved in a digital format and given to RUSA on a USB flash drive in MP4 format. The digital file for each video recording will be saved with a file name corresponding to the address for the inspected service line. Each video service line inspection shall be accompanied by a written summary approved by RUSA.

Television inspection video files shall clearly identify the associated property address, both on the video file and on the written summary form. The identification on the video file shall consist of visually identifying the house or structure with camera and verbally stating the address of the subject property on the tape. At no time shall the recording be turned off. The inspection video of a single private sewer line needs to be continuous without interruption.

The inspection of the line shall note all information about its condition, live or abandoned service, length, distances to surface features, fittings, obvious defects,

changes in material, alignment changes, and all obstructions on both the video file and written summary. The camera will pause and give time to look at any breaks, cracks, offset joints or other deformity in the pipe. If the service lines are shared by two or more structure properties, the Contractor shall clearly note on the video file and written summary which structures are sharing the service line. The Contractor may access the service line at a cleanout near the house or structure or near the property line when the service transfer is made. Regardless of where the Contractor accesses the service line, the entire length of line from the main to the building must be inspected. The Contractor shall use an electronic location device to verify the path of the lateral.

The Contractor must notify and receive permission, in writing or verbally, from the Property Owner before entering private property. If the entire length of the private service line cannot be inspected for any reason, the Contractor shall notify the Engineer immediately.

00415.41 Pre-Construction Video Inspection – Delete this entire section.

00415.70 Post-Construction Video Inspection – Modify as follows:

(a) Types of Inspection

Replace the second item in the bulled list with the following:

- One inspection of service line laterals

00415.80 Measurement – Modify as follows:

(b) Service Line Lateral Video Inspection

Add the following to the end of the paragraph:

The cost of cleaning the lines prior to television inspection, if required, will be considered incidental.

00415.90 Payment – Add the following bullets to the bulleted list that begins with “no separate or additional”:

- Pipe Cleaning
- Pre-construction mainline and service line video inspection

SECTION 00440 - COMMERCIAL GRADE CONCRETE

Comply with Section 00440 of the Standard Specifications modified as follows:

00440.13 Field-Mixed Concrete - Add the following paragraph to the end of this subsection:

Pre-packaged dry blended concrete from the QPL may be used for work items listed in 00440.14(a).

SECTION 00442 – CONTROLLED LOW STRENGTH MATERIALS

Comply with Section 00442 of the Standard Specifications.

SECTION 00444 – PRIVATE PROPERTY SEWER WORK

Section 00444, which is not a Standard Specification, is included by Special Provision.

Description

00444.00 Scope – This work consists of installing individual private pumping stations (also referred to as grinder pumps) located on each individual property listed in the bid list. This work involves but is not limited to design, construction, installation, and testing and warranting of all inside and outside private plumbing systems as directed by RUSA.

The Contractor is responsible for obtaining all necessary private plumbing permits for work on private property.

00444.02 Submittals – Submit the following:

Shop Drawings and Preconstruction Literature:

- Acknowledgement that products submitted meet requirements of standards referenced.
- Descriptive literature, bulletins, and catalog cut sheets of the equipment.
- Pump performance curves showing capacity versus head, and brake horsepower.
- Materials of construction.
- Detailed drawings of complete pump assembly and tank showing all pertinent dimensions and penetrations.
- Alarm panel data and pump wiring diagram.
- Complete installation instructions, with points of electrical and plumbing connection requirements clearly shown.
- Details showing how the alarm panel will be installed within the alarm panel enclosure.
- Manufacturer's installation instructions.
- Operation and Maintenance Manuals:
    - Manufacturer’s catalog data for each specified pump station.
    - Manufacturer’s Parts List for each specified component.
    - Manufacturer’s installation, adjustment and startup procedures for Pump Station 74.
    - Manufacturer’s periodic maintenance schedule and specific procedures.

Field-verified influent sewer depth to verify location and overall tank dimensions for each grinder pump. Provide updated plan drawings showing the routing of the sewer force main, power circuits and control circuit routing.

Preconstruction and Post-Construction Photography:

- For Individual Pump Stations: Prior to the start of construction, take preconstruction digital photographs along the entire agreed-upon alignment of the new 1 ¼" pressure sewer, location of new collection valve box and cleanout box, location of new grinder pump, location of new system control/alarm panel, and access route(s) to be used by the Contractor. Following construction, post-construction photographs shall be taken at the same vantage points as those of preconstruction photographs.
- For Gravity Laterals: Prior to the start of construction, take preconstruction digital photographs along the entire agreed-upon alignment of the new 6" sewer pipe, location of new cleanout, and access route(s) to be used by the Contractor. Following construction, post-construction photographs shall be taken at the same vantage points as those of preconstruction photographs.

00444.03 Warranty – The individual pumping station Manufacturer shall provide a part(s) and labor warranty on the complete station and accessories, including, but not limited to, the alarm panel for a period of 24 months after notice of RUSA's acceptance. Any manufacturing defects found during the warranty period will be reported to the Manufacturer by RUSA and shall be corrected by the Manufacturer at no cost to RUSA.

00444.10 Materials – All materials and fixtures used to complete this work shall meet Oregon State Specialty Plumbing Code. The completely assembled and wired individual pumping station shall be listed by Underwriters Laboratories, Inc. to be safe and appropriate for the intended use. The individual pumping station shall be capable of reducing all components in normal domestic sewage to finely-divided particles.

00444.11 Individual Pumping Stations – Individual Pumping Stations shall be complete factory-built and tested, individual pumping stations consisting of a removable individual pumping stations assembly (pump and motor) suitably mounted in a basin constructed of the materials specified and include electrical supply cable and electrical quick disconnect, pump removal system, discharge assembly/shut-off valve, anti-siphon valve/check valve assembly, electrical alarm panel and all necessary internal wiring and controls.

The individual pumping stations shall meet accepted standards for plumbing equipment for use in or near residences, shall be free from noise, odor, or health hazards, and shall have been tested by an independent laboratory to certify its capability to perform as specified in either individual or low pressure sewer system applications. As evidence of compliance with this requirement, the individual pumping station shall bear the seal of NSF International

Approved Manufacturers shall include:

- Model DH071, Environment One Corporation
- or Approved Equal.

00444.12 Pump Rated Conditions: Pumps shall be integral, vertical rotor, motor driven, solids handling pump with a single mechanical seal. Pump castings shall be cast iron, fully epoxy coated. Rotor shall be polished, precipitation hardened stainless steel. Stator: ethylene propylene synthetic elastomer, suitable for domestic wastewater service.

Pumps shall meet the following conditions:

- 15 GPM at 0 feet total dynamic head (TDH).
- 11 GPM at 92 feet TDH.
- 7.8 GPM at 185 feet TDH.
- The pump must also be capable of operating at negative TDH without overloading the motor.

00444.13 Grinder: Grinder shall be dynamically balanced, direct-driven by a single, one-piece motor shaft and shall have a maximum nominal speed of 1800 rpm. Grinder Impeller shall be one-piece, cutter wheel with inductively hardened cutter teeth. Shredder Ring shall be cast iron, stationary type.

00444.14 Electric Motor: Motor shall be 1 HP, 1725 RPM, 240 Volt, 60 Hertz, 1 Phase, capacitor start, ball bearing, induction type with Class F insulation. The motor shall have inherent protection against running overloads or locked rotor conditions by the use of an automatically-reseting, integral thermal overload protector incorporated into the motor.

00444.15 Tanks and Access Covers: Tanks shall be 70 gallon minimum capacity, dual wall, corrugated high density polyethylene with generally smooth interior walls. The tank wall and bottom shall be designed to withstand the pressure exerted by saturated soil loading at maximum burial depth. The inlet sewer connection shall have an EPDM grommet fitting to accept a 4-inch Schedule 40 PVC pipe in location determined in the field by the Engineer and homeowner. Contractor shall field verify influent sewer depth to determine exact tank height to grade and overall tank dimensions.

Lateral vent connection shall use manufacturer's standard PVC glue joint to accept 2-inch Schedule 80 PVC vent pipe. All basin wall penetrations shall be factory installed and warranted by the manufacturer to be watertight. The tank shall be factory leak tested to ensure leak tightness.

Tank Access Cover shall be lockable, low profile, and watertight high-density polyethylene cover with minimum load rating of 150 lbs per square foot. Integral vent to atmosphere shall be sealed to maintain full watertight cover. A remote vent to atmosphere shall be provided.

Station Access Cover shall be lightweight, composite cover manhole with slip-resistant tread pattern, H-20 load rating, stainless steel recessed lifting handle and bolts, raintight connection, 36-inch minimum clear opening, fiberglass cover, painted steel ring, and galvanized steel skirt suitable for installation. Approved products include:

- OPW Conquistador Plus Composite Cover Manhole, Model 39CD-RL10,
- or Approved equal.

00444.16 Discharge Piping and Valves: Discharge piping shall be 304 stainless steel with stainless steel ball valve rated for minimum 200 PSIG operating pressure at 150 degrees Fahrenheit. The discharge shall terminate outside the tank with a stainless steel, 1-1/4-inch Female NPT fitting. A flapper-type, integral, anti-siphon check valve shall be built into the discharge piping. The check valve shall have a full-ported passageway when open and shall be rated for minimum 200 PSIG operating pressure at 150 degrees Fahrenheit. Moving parts shall be constructed of stainless steel. The discharge piping shall include a quick disconnect to easily disconnect the pump and discharge piping from the basin wall for removal and installation.

00444.17 Core Unit: The pump station shall be a wet well/dry well configuration and include a cartridge type, easily removable core assembly consisting of pump, motor, grinder, all motor controls, anti-siphon/check valve, level controls, electrical quick disconnect and wiring. The core unit shall include an integral 2-inch vent between the wet well and dry well. The core unit shall be installed in the basin by the manufacturer. A nylon rope shall be used to remove the core unit. The rope shall be tied off at a stainless steel hook near the pump station lid.

00444.17 Electrical Quick Disconnect and Supply Cable: NEMA 6P rated electrical quick disconnect supplied with 32 feet minimum of electrical supply cable (6 conductor 14 gauge, type SJOW cable, pre-wired and watertight to meet UL requirements), 25 feet of which is useable cable outside the station to connect to the alarm panel specified in this Section. Provide additional supply cable as required to suit the specific installation. The quick disconnect shall require no tools for connecting, seal against water before the electrical connection is made, and include radial seals to assure a watertight seal regardless of tightening torque.

00444.18 Controls: Pump operation shall be controlled by monitoring the pressure changes in an integral air column connected to a pressure switch. The level detection device shall have no moving parts in direct contact with the wastewater and shall be integral to the pump core assembly in a single, readily-exchanged unit. The pump shall operate when the push to run button is depressed even with the level sensor housing removed from the pump. High-level sensing shall be accomplished by a separate air column and pressure switch. Closure of the high-level sensing device shall energize an alarm circuit as well as a redundant pump-on circuit. Pump ON/OFF and high-level alarm functions shall not be controlled by the same switch. All fasteners throughout the assembly shall be stainless steel. Motor Starting Controls shall be located in the cast iron enclosure of the core unit secured by stainless steel fasteners and shall include a redundant pump starting circuit in the event of a high-level alarm. Level Sensing Controls shall be located in a separate enclosure from the motor starting controls and sealed via a radial type seal integrally attached to the pump assembly so that it may be removed from the station with the pump. A factory installed equalizer diaphragm that compensates for any atmospheric pressure or temperature changes shall be provided for each pump.

00444.19 Alarm Panels: NEMA 4X rated, thermoplastic, hinged, lockable cover with padlock, UL-listed alarm panel suitable for wall mounting or pole mounting. The alarm panel shall contain one 15-amp, double-pole circuit breaker per pump core for the power circuit and one 15-amp single-pole circuit breaker for the alarm circuit. The panel shall contain a push-to-run feature, an internal run indicator, and a complete alarm circuit. All circuit boards in the alarm panel shall be protected with a conformal coating on both sides and the AC power circuit shall include an auto resetting fuse. Panel shall include an external audible and visual

alarm; push-to-run switch; push-to-silence switch; and high level alarm capability. The visual alarm lamp shall be inside a red, oblong lens mounted to the top of the enclosure in such a manner as to maintain NEMA 4X rating. The audible alarm shall be externally mounted on the enclosure, capable of 93 dB at 2 feet. The audible alarm shall be capable of being deactivated by depressing a push-type switch that is encapsulated in a weatherproof silicone boot and mounted on the enclosure (push-to-silence button). Model E/One Sentry or approved equal.

The entire alarm panel, including all specified options below shall be listed by Underwriters Laboratories, Inc:

Generator Receptacle and Auto Transfer: The alarm panel shall include a 20 amp, 250 VAC generator receptacle with a spring-loaded, gasketed cover suitably mounted to provide access for connection of an external generator while maintaining a NEMA 4X rating. An automatic transfer switch shall be provided, which automatically switches from AC power to generator power. Power shall be provided to that alarm panel through the generator receptacle whenever power is present at the receptacle, allowing the audible and visual alarms to function normally in generator mode. When power is no longer applied to the generator receptacle, the panel is automatically switched back to the AC Mains power. (No manual switching within the panel enclosure is necessary to switch from generator power back to AC Mains, so the mode cannot be inadvertently left in the generator position after pumping down the station in generator mode as is the case with a manual transfer switch).

Main Service Disconnect Breaker: A separate, internal breaker rated and approved for use as “service equipment” and to act as a main service disconnect of the individual pumping station shall be provided.

Panel Protection Package: Provide protection package to protect from the following operating conditions:

- Low voltage (brownout) protection: prevents pump operation when incoming AC Main voltage drops below a predetermined minimum voltage as defined by the manufacturer.
- Run dry protection: prevents pump operation during low wastewater levels in the dry.
- High system pressure protection: prevents the pump from operating during atypically high discharge pressures (closed valve or abnormal line plug).

Other included features:

- Alarm activated dry contacts: normally open relay contact closes upon alarm activation.
- Alarm activated contacts for Remote Indoor Alarm Module: In normal, powered operation, the Remote Indoor Alarm Module will operate as a high level alarm. In a power outage (no power to core), the Remote Indoor Alarm Module will operate as a power loss indicator.
- Inner door dead front.
- Separate LED’s for each condition.
- High/low voltage monitoring with trouble indication.
- High/low wattage monitoring with trouble indication.

- Extended run time monitoring with trouble indication.
- Cycle/event counter.
- Run time counter (hour meter).
- Run time limit - time adjustable, user-selected options: 10 minutes (default) to 120 minutes in 1-minute intervals.
- Power-up delay - time adjustable, user-selected options: none (default), to 300 minutes in 1-minute intervals.
- Alarm delay - time adjustable, user-selected options: zero to 10 minutes in 30-second increments; 4 minutes is default.
- System self-test diagnostic.
- User-selectable alarm latch.
- User-selectable protect mode disable.
- User-selectable buzzer timer.

Indicators and programming features shall include:

- Green ready LED to indicate AC power to the station is satisfactory.
- Green pump run LED to indicate pump is operating.
- Red trouble LED indicator and predictive visual alarm notification (“blinking” alarm lamp; clears on normal cycle).
- Red high level alarm LED indicator.
- Manual run switch to manually activate pump(s).
- Menu-driven programmable controller with navigation overlay-type buttons (Enter, Scroll, Up, Down).
- Green normal operation LED and mode button for mode status.
- Pump performance menu LED with LCD display of the following pump performance statistics:
    - Real-time voltage.
    - Real-time amperage.
    - Real-time wattage.
    - Minimum/Maximum/Average voltage.
    - Minimum/Maximum/Average amperage.
    - Minimum/Maximum/Average wattage.
    - Minimum/Maximum run-time.
    - Average run-time.
    - Last run-time.
    - Cycle/event counter.
    - Run time counter (hour meter).
- Diagnostics menu LED.
- Initialize system menu LED.
- Run limit menu LED.
- Alarm delay menu LED.
- Power delay menu LED

Remote Indoor Alarm Module:

- A separate, Remote Indoor Alarm Module shall be provided to indicate a high level alarm with or without AC power to the individual pumping station and include the following features:

  - Internal power source (battery) enabling its continued operation without AC power.
  - Audible and visual alarm, both of which shall automatically reset if the high level alarm condition is eliminated.
  - Silence button for the audible alarm.
  - Test button.

Optional Remote Monitoring System:

- Remote Monitoring System shall be E One Remote Sentry, no substitutions.
- RUSA will coordinate with the private property owners and opt-in for the remote monitoring system prior to the start of construction.
- The remote monitoring system shall use a cellular transmitter to communicate operating parameters, trouble conditions and high level alarm. Each panel shall be equipped with hardware that interfaces with the panel's circuit board assembly to obtain historical operating data and current system status. This information shall then be transmitted to a host system that utilizes an interactive website interface for end users to access the information.
- The website shall quickly identify sites that may be experiencing trouble and shall be able to generate reports including: running tallies of usage, flow rates, predictive maintenance indicators and asset mapping/management. The website shall also provide a means to configure alerts corresponding to the various trouble conditions that can be sent to the property owner via secure e-mail, SMS text, phone or an existing telemetry system
- Accessible data shall include:
  - Pump runtime.
  - Pump cycles.
  - Minimum, maximum, average and last runtime.
  - Minimum, maximum, and average operating voltage, wattage and amperage.
  - Trouble events:
    - High level alarm.
    - Brownout (low voltage).
    - Overvoltage.
    - Run dry (low wattage).
    - Overpressure (high wattage).
    - Excessive runtime.
  - Alarm circuit fault.
  - Watt meter fault.
  - Watt based flow rate data.
- The remote monitoring system shall be equipped with a battery that will allow one message to be sent out in the event of a power loss.
- The communication package shall be a factory prewired unit within the panel enclosure including the compact cellular transmitter, power supply and antenna.

00444.20 Residential Service Panel Modifications: Add new circuit breaker to existing panels. New circuit breaker shall be 30A, 2-pole breaker for individual pumping station control/alarm panel in existing loadcenter (circuit breaker panel). The new circuit breaker

shall be from the same manufacturer as the existing loadcenter. Provide and route a 30A, 240V circuit (3/4"c, 3#10 & 1#10 ground) from the loadcenter to individual pumping station control/alarm panel as required. Coordinate routing of new IPS cable from new service panel inside house with RUSA and homeowner. Restore disturbed walls and ceiling to pre-construction conditions. Assume the following properties will require a new circuit breaker:

- 4071 Hooker Road
- 4073 Hooker Road
- 4019 Hooker Road
- 3995 Hooker Road
- 3950 Stephens Street

If a new load center is required, replace existing service panel with new Eaton Electrical or equal 200A, 120/240V, single phase panel with 200A main breaker and 42 circuits. Install new, matching circuit breakers (as existing panel) in similar pole locations plus one additional 30A, 2-pole breaker and two spare 20A, 1-pole breakers. Reconnect existing service conductors into new breakers in new service panel. Properly ground new panel per NEC. Coordinate routing of new IPS cable from new service panel inside house with CM and homeowner. Restore disturbed walls and ceiling to pre-construction conditions.

Installation of new load centers, if required, will be paid for as Force Account Work. All work shall be done by a licensed electrician under electrical permit issued by Douglas County Building Division.

00444.40 Construction - Construction shall be preceded by the following:

- Factory test shall include the testing of the pump and all ancillary components such as, the anti-siphon valve/check valve, discharge assembly and each unit's dedicated level controls and motor controls. Each individual pumping station shall be submerged and operated for 5 minutes (minimum).
- Provide certified test results from the manufacturer showing operation of each individual pumping station at two different points on its curve, with a maximum pressure of no less than 80 psi. All completed stations shall be factory leak tested to assure the integrity of all joints, seams and penetrations. All necessary penetrations such as inlets, discharge fittings and cable connectors shall be included in this test along with their respective sealing means (grommets, gaskets etc.).
- All individual pumping station units shall be delivered to the job site assembled and ready for installation.
- Provide notice to the individual property owner 48 hours before beginning work and 24 hours before resuming work following a pause of more than 2 days.

00444.41 IPS Installation - Individual pumping station shall be installed in accordance with the manufacturer's instructions and as indicated on the Drawings.

Coordinate with each homeowner on desired location for IPS system control/alarm panel and remote alarm panel. In general, the IPS system control/alarm panel will be located outdoor insight of the IPS pump station hatch. The remote alarm panel will be located within the

residence. Route alarm and signaling conductors and cables concealed where feasible unless directed otherwise. Restore the homeowner's walls to existing conditions.

Reconnect any existing circuits disturbed by modifications to the load center.

Upon completion of the installation, the authorized factory technician(s) shall perform the following test on each station:

- Make certain the discharge shut-off valve in the station is fully open.
- Turn ON the alarm power circuit and verify the alarm is functioning properly.
- Turn ON the pump power circuit. Fill the sump with water to initiate the pump operation to verify automatic "on/off" controls are operative. The pump should turn ON automatically.

The Contractor shall be responsible for the satisfactory operation of the entire system.

Measurement

00444.80 Measurement – Measurement for completing all inside and outside private plumbing work will be on the unit basis, for each property listed in the bid.

Payment

00444.90 Payment - The accepted quantities of work performed under this Section will be paid for at the contract unit price for each listed property.

Pay Item	Unit of Measurement
(a) Private IPS, Reroute Lateral, Property Address	Each
(b) New Pressure Sewer, Property Address	LF

Item (a) includes all work within the private property house included in the scope for each individual private property address including installation of the IPS.

Item (b) includes all pressure sewer from IPS work from the IPS to the connection to the RUSA sewer main.

Payment will be payment in full for furnishing and placing all materials and for furnishing all equipment, labor and incidentals necessary to complete the work as specified.

SECTION 00445 - SANITARY, STORM, CULVERT, SIPHON, AND IRRIGATION PIPE

Comply with Section 00445 of the Standard Specifications modified as follows:

00445.11(e) Tracer Wire - Replace the sentence that begins "Use 12-gauge stranded…" with the following sentence:

Use 12-gauge stranded or solid copper insulated high molecular weight polyethylene (HMW-PE) tracer wire or 12-guage copper clad steel reinforced insulated HMW-PE tracer wire on pipes replaced on private property. The tracer wire shall be securely bonded together at all wire joints with a watertight connector to provide

electrical continuity and prohibit corrosion, and it shall be accessible at all tracer wire access points.

00445.74 Video Inspection of Sanitary and Storm Sewers - Replace this subsection with the following subsection:

00445.74 Video Inspection of Sanitary Sewers, Storm Sewers, and Culverts -

When constructing a new run, an extension, or a repair of sanitary sewer, storm sewer, or culvert pipe, perform post-construction video pipe inspection, according to Section 00415, of all joints, including the location where new pipe meets existing pipe. Conduct the post-construction video pipe inspection after backfill and compaction is complete, but before any finish surfacing or final paving is performed.

For pipe sections being replaced, video pipe inspection is not required prior to replacement. Video pipe inspection is not required for pipe sections that are being abandoned.

00445.80 – Measurement - Replace this section with the following:

(a) Pipes – The quantities of pipe of the various kinds, types, and sizes, will be measured on the length basis, and will be determined by the length and depth of installation as follows:

- **Length –** The length will be measured, with no deduction for structures or fittings, along the pipe flow line from center to center of manholes, inlets, special sections, or the ends of pipe, whichever is applicable.

(b) Tee and Wye Fittings – The quantities of tee and wye fittings will be measured on the unit basis. No deduction will be made from measurement of pipe for the length of the fitting.

(c) Cleanouts - Cleanouts will be measure on the unit basis. Cleanouts shall be designated as “in line” (part of other service line work) or “cut in only” (isolated and a separate dig connection).

(d) Service Lines – There will only be one “connection” per active service line. All other connections and/or disconnects/reconnects are considered incidental.

00445.91 – Payment – Replace this section with the following:

The accepted quantities of pipe and related work items performed under this Section will be paid for at the Contract unit price, per unit of measurement, for the following items:

Pay Item	**Measurement**
(a)___inch _____Pipe, _____Depth	Foot
(b)Service Line Reconnections	Each
(c)___Inch Sanitary Sewer Cleanout	Each
(d)Terminal Cleanout	Each
(e) Cleanout over Existing Lateral	Each

In item (a), the nominal pipe diameter will be inserted in the first blank. The type of pipe will be inserted in the second blank. The appropriate flow line depth range will be inserted in the third blank.

In item (b), there will only be one “connection” per active service line when a lateral is being replaced by Open-cut on a mainline being replaced by CIPP. All other connections and/or disconnects/reconnects and Inserta-Tees are considered incidental.

In item (c), the nominal pipe diameter will be inserted in the first blank. The Payment will be payment in full for furnishing and placing all materials, and for furnishing all equipment, labor, and incidentals necessary to complete the work as specified.

Item (e) applies to all cleanouts installed over existing laterals, and includes all material, excavation, backfill, final surface restoration, labor and incidentals necessary to complete the work as specified. No separate or additional payment will be made for installation of a cleanout if the cleanout is not shown on the Drawings and the cleanout is installed for Diversion of flow, or solely for the convenience of the Contractor

Video Pipe inspection will be paid for according to 00415.90.

Trench resurfacing will be paid for according to 00495.90.

No separate or additional payment will be made for:

- Trench excavation, bedding, pipe zone material, and trench backfill
- Pipe plugs, stoppers, and other required fittings including but not limited to wyes, tees, couplers, branch saddles, service saddles, and slip joints.
- Metal pipe anchors
- Tracer wire
- Hydrostatic, air, joint, and deflection testing
- Concrete blocks
- Bypass pumping

When the Contract Schedule of items does not indicate payment for pipes or other work under the Section, no separate or additional payment will be made. Payment will be included in payment made for the appropriate items under which this work is required.

SECTION 00470 - MANHOLES, CATCH BASINS, AND INLETS

Comply with Section 00470 of the Standard Specifications modified as follows:

Add the following subsection:

00470.02 Submittals - Provide the following submittals for review and approval:

(a) Inside Drop Product Data - Submit product data regarding the inside drop and manufacturer’s installation instructions. Manufacturer shall be Reliner/Duran Inside Drop System, or approved equal.

00470.10 Materials - Replace the subsection references for "Precast Concrete Manholes, Catch Basins and Inlets…" with "02450".

00470.41(d) Inside Drop Manhole Assemblies - Add the following subsection:

Construct inside drop manhole assemblies as shown in accordance with manufacturer's installation requirements. Abandon existing outside drops as approved.

Where inside drops are installed on manholes with a corrosion-resistant coating (e.g., epoxy, polyurethane, HDPE liner, etc.), 304 stainless steel hardware is required. Use a butyl rubber sealant at all penetrations into the existing manhole wall to seal any penetrations from corrosive gases.

00470.90 Payment – Add the following pay item to the list:

(l) Inside Drop Assembly…….Each

SECTION 00490 - WORK ON EXISTING SEWERS AND STRUCTURES

Comply with Section 00490 of the Standard Specifications modified as follows:

00490.40 General - Add the following to the end of this subsection:

The Contractor shall be required to maintain access to driveways during all bypass pumping operations, which may require the use of temporary road ramps over the bypass pumping line. All additional costs associated with maintaining driveway access shall be included in the "Sewer Bypassing" bid item.

Use critically silenced generators and pump units. Such approved generators and accompanying pumps shall be continuously monitored while in operation and shall be placed to minimize disturbances to residential and commercial areas. If necessary to meet noise ordinances, sound baffles and temporary sound walls shall be installed to deflect sound from generators and bypass-pumps away from the residential areas or as directed by the Owner. No variance from any local noise ordinances will be allowed unless the Contractor secures a noise variance at no additional expense to the Owner.

Each sewage diversion pump shall be powered by a dedicated power generator and shall operate as a single pumping unit. A minimum of two primary sewage diversion pumping units shall be operated in parallel to bypass pump the total anticipated peak sewage flow. For system redundancy, the Contractor shall have on site a minimum of one back-up sewage pumping unit for system redundancy. The backup sewage pumping unit shall be of the same capacity as the primary pumping unit.

Bypass pumping may be necessary overnight dependent upon the Contractor's approved construction sequencing plan. If overnight bypass pumping is necessary, the Contractor shall provide a backup pump and generator. Any additional costs associated with overnight bypass pumping operations shall be included in the "Sewer Bypassing" bid item.

Add the following subsection:

00490.43 Abandoning Pipe in Place – Replace this subsection with the following subsection:

Drain abandoned pipes and plug watertight. Plug abandoned pipes with gasketed mechanical plugs or grout seal, as directed. Where abandoned pipes connect to sewer manholes or inlets, install the plugs or seals from the inside of the manhole or inlet and reshape the channel to conform to the Standard Drawings.

Fill abandoned pipes greater than 4 inches diameter with controlled low-strength material meeting the requirements of 00442, or other approved material.

00490.43 Filling Abandoned Pipe, Manholes and Catch Basins – Replace this subsection with the following subsection:

(a) Filling Abandoned Structures – Cap or plug all connecting pipes to manholes ~~and catch basins~~ that are scheduled to be abandoned. Remove the manhole cone or flat top and manhole sections~~, or the catch basin frame,~~ to a minimum depth of 3 feet below finish grade and fill the remaining manhole barrel or catch basin with granular material meeting the requirements of section 02630. Compact the granular material to 90 percent of maximum density according to AASHTO T 99. When in landscaped or unimproved roadway sections, backfill with approved materials meeting the requirements of 00330.13. Place topsoil meeting the requirements of 00330.11 for the last 1 foot of backfill.

(b) CLSM for Abandoned Structures – After Pipe-bursting through the existing manhole fill the manhole to 3 feet below the finish grade of the roadway with CLSM according to section 00442. Leave the manhole cone, rim, and lid in place. Do not cut into the existing roadway.

00490.46 Adjusting Manholes – Add the following subparagraph:

(f) Manhole Base Rehabilitation – Remove all concrete, brick, or mortar that is not sound or has been damaged by chemical exposure, corrosion, or other means of degradation to a sound concrete surface. Prevent loose substrate and other materials from entering collection system pipelines.

Engineer will view the base after loose substrate has been removed and direct any necessary chipping of the existing concrete base to improve the flow channel. Exercise caution in chipping out the existing concrete base to prevent cracking of manhole walls.

Use non-shrink cementitious grout material to form a smooth transition with a reshaped invert and a raised manhole bench to eliminate sharp edges on the pipe, bench, or channeled invert. Thoroughly mix all materials to ensure all agglomerated particles are reduced to original size or removed prior to placement. Clean mixing equipment at regular intervals to remove all adherent materials. Add water to the mix in accordance with the manufacturer's recommendations. Re-mixing or tempering will not be permitted. Do not reuse rebound materials. The material thickness is determined based on resurfacing in order to fill profile of deteriorated concrete eliminating all peaks and valleys of deteriorated concrete and repair areas of spalls, cracks, bugholes in order to achieve a smooth manhole invert that matches

flow lines of new or existing pipe. Make finished benches/inverts smooth and without defects which would allow for accumulation of debris.

Allow the grout to cure according to manufacturer recommendations prior to putting the manhole back in service.

00490.90 Payment - Replace pay item (f) with the following pay item:

(f) Extra for Manholes Over Existing Sewers ..... Each

Add the following pay items to the list:

(i) Rehabilitate Manhole Base..... .....Each
(j) Sewer bypassing..... LS

Replace the paragraph that begins "Item (f) applies to manholes…" with the following three paragraphs:

Item (f) includes all extra or additional costs associated with installing the manholes over existing sewers. These costs are in addition to those which are included in payment for the manholes.

Item (j) applies to providing continuous and redundant sewer bypassing of the sanitary sewer mainline and laterals as specified. This item includes preparation of bypassing plans, furnishing equipment and labor needed to operate and supervise the equipment to prevent spills, coordination with the City and the public, and all costs and liability resulting from sewer backups or sewer spills.

Manholes will be paid for according to 00470.90.

SECTION 00492 – MANHOLE REHABILITATION

Section 00492, which is not a Standard Specification, is included in this Project by Special Provision.

Description

00492.00 Scope - This work consists of rehabilitating existing manholes using applied materials to restore or augment structural integrity, repair voids, and protect against corrosion and infiltration. Work also includes cleaning and surface preparation, removal of loose materials, stopping infiltration, manhole step removal, and manhole testing.

00492.01 Definitions - The following terms used in this Section are defined as follows:

Structural Lining – the application of a cementitious rehabilitation system that will provide a fully structural solution as well as provide some minor corrosion protection from bacteriological, chemical, gaseous (hydrogen sulfide), erosion and abrasion.

Protective Coating – the application of a coating system to provide continuous protection against corrosion from bacteriological, chemical, gaseous (hydrogen sulfide), erosion

and abrasion, withstand hydrostatic pressures, and provide some structural enhancement to the existing structure.

Rehabilitation System – the application of lining, coating, or combination of the two as called out in this Section or on the Drawings. In addition, materials used to repair or prepare the existing surface is considered a part of the rehabilitation system

00492.02 Submittals - Provide the following for review in a single package:

(a) Manhole Rehabilitation Work Plan, including:

- Product documentation, including:
  - Safety Data Sheets (SDS) for each product used.
  - Written certification from lining manufacturer that each of the proposed manhole rehabilitation and repair products are compatible with each other.
  - Certified, third-party ASTM test results indicating proposed products conform to and are suitable for their intended use per this Section.

- Manufacturer's technical data sheet for each product used, including:
  - application, substrate and air temperatures necessary for application
  - acceptable humidity and surface temperature ranges for application
  - cure time
- Written certification by the manhole rehabilitation system manufacturer stating that the installer meets the minimum experience requirements listed in 00492.30.
- Manhole preparation plan, including:
  - Proposed methods and procedures for surface preparation, which must meet the minimum guidelines indicated in the lining manufacturer's application instructions
  - Proposed methods for sealing leaks to allow for optimum bond strength conditions for the approved rehabilitation system.

- Description of rehabilitation system and equipment components, including certification that the equipment to be used for applying the products has been manufactured or approved by the manhole rehabilitation system manufacturer(s).

- Detailed instruction and methodology for rehabilitation system application, including how finish work for all pipe and manhole connections to rehabilitated manholes will be completed.

(b) Submit the following during construction, within 10 days of completion of tests:

- Pull test records that include, at a minimum: manhole identification number, test pressure, repeat test number, repairs (if any) made, and actual loading fixture (dolly) used in each test.

Materials

00492.10 Materials - Furnish materials that will meet the following requirements:

Grout 02080
Repair, Resurfacing, and Lining Materials for Manhole Rehabilitation
..... 02221

Equipment

00492.20 Equipment - Provide equipment constructed or certified by the lining manufacturer.

Labor

00492.30 Personnel:

(a) Use installers trained and certified by the manufacturer in handling, applying and finishing manhole rehabilitation materials.

(b) Use installers who have completed successful rehabilitation of at least 30 sanitary sewer manholes in the last 2 years using the proposed method and materials.

(c) For each material and method, work must be supervised by a foreman previously responsible for rehabilitating a minimum of 10 manholes using the manufacturer's approved process.

Construction

00492.40 General - Deliver materials to the job site in original, unopened containers, each bearing the manufacturer's name, installation method, batch number, date of manufacture, storage life, and special handling directions. Remove from the site any uncured compound determined to be more than six months old. Do not use uncured product or grout if container has been open for more than 24 hours or per the manufacturer's instructions, whichever is less.

Materials may be rejected and removed from the site if they exceed the manufacturer's recommended storage life. Provide replacement materials at no additional cost.

Store materials in enclosed structures, protected from weather and excessive heat or cold. Store flammable materials according to state and local codes.

All manholes are to be rehabilitated with a structural liner shall be followed by a protective coatings.

All manholes are assumed to have 48" diameter circular sections.

00492.41 Manhole Preparation:

(a) Diversion of Flow - Provide and maintain a flow diversion system in accordance with Section 00490. Dam, plug or divert all active flows, including leaks, to ensure that the all flow is maintained at an elevation lower than the manhole surfaces requiring rehabilitation during preparation, application and curing process. Put plywood mats or sheeting over the existing

flow channel and bench to prevent debris from falling into the sewer. Collect debris from manhole bench at the end of each work day.

(b) Manhole Steps – Prior to cleaning, cut off manhole steps flush with manhole wall and grind back remaining steel to ½-inch below existing concrete surface, according to 00490 and as approved.

(c) Cleaning and Surface Preparation – Remove all brick, concrete or mortar that is loose, protruding, unsound or is damaged by chemical exposure, corrosion or other means of degradation, leaving a sound surface. All surfaces shall be clean and free of laitance or loose material.

Prepare areas of exposed rebar by abrasive-blasting all exposed reinforcing steel surfaces to remove all contaminants and corrosion products. Reinforcing steel, exposed by corrosion or during surface preparation operations, shall be treated with a water-based epoxy resin, anti-corrosion coating and bonding agent such as Armatec 110 EpoCem, manufactured by the Sika Corporation, or approved equal.

Clean and abrade all surfaces that are to be rehabilitated in order to produce a sound surface with adequate profile and porosity, and to provide a strong bond between the rehabilitation product and the substrate. All surface preparation methods shall be performed in a manner that produces a uniform, sound, clean, neutralized surface that is not excessively damaged and is suitable for the specified rehabilitation product(s), and adhere to the manufacturer's recommendations.

Seal all infiltration leaks per manufacturer's instructions. Use grout and sealing materials recommended by the manufacturer and as approved. Repair material that is not verified by the manufacturer at the time of construction will not be allowed.

Pack annular spaces between the manhole cone or chimney and the bottom of the manhole frame with approved repair material. Where incoming laterals are to be abandoned, block laterals and build surface to be flush with manhole walls with approved repair material. Use resurfacing materials to fill large voids, lost mortar in masonry structures, smooth deteriorated surfaces and rebuild severely deteriorated structures so the profile of the prepared concrete surface does not have any pits or holes exceeding ¼-inch in depth. Trowel repair material to provide a smooth surface with an average profile equivalent to coarse 60 grit sandpaper to optimally receive the rehabilitation system products.

Surfaces to receive rehabilitation shall be prepared with a series of grooves (key ways) cut into the substrate prior to the structural liner and cut into the structural liner prior to the protective coating at a spacing and depth as per manufacturer recommendation but no less than above and below each horizontal manhole joint, above the manhole bench, and at the top of the flow channel. The grooves shall be angled into the substrate at a 60 degree angle with a width and depth no less than 1/4 inch. At no time shall the existing reinforcement be cut or damaged during installation of the key ways.

(d) Inspect Manhole - Prior to surface restoration, inspect all surfaces receiving rehabilitation. Provide notice of any obvious defects interfering with the proper surface preparation or application of proposed products. Inspection by the Engineer is required during and after surface preparation is complete. Manhole must pass visual inspection by the Engineer prior to application of rehabilitation products/materials.

Test prepared surfaces after cleaning, but prior to application of the rehabilitation products/materials, to determine if pH, profile and moisture content of the concrete meet the manufacturer's recommendations.

00492.42 Structural Lining - Do not begin installation until the concrete substrate is properly cured according to the manufacturer's recommendations, and as approved. Use application procedures according to the lining manufacturer recommendations and specifications, including material handling, mixing, environmental controls during application, safety, and spray equipment.

Confirm that the ambient temperature and humidity, the prepared surface temperature and moisture content, and the temperature of the lining material to be applied are within the manufacturer's allowable ranges. Shield surfaces receiving linings to avoid direct sunlight exposure or other intense heat source.

Properly match pump, hoses, gun, tip, and pressures to the specific lining application used. The equipment must be properly cleaned before work starts. Test spray pattern for uniformity of distribution.

Thoroughly mix all lining materials to ensure all agglomerated particles are reduced to original size or removed prior to placement into the application equipment (i.e. the hopper). Each batch of material should be entirely discharged before recharging with fresh material. Clean mixing equipment at regular intervals to remove all adherent materials. Add water to the mix according to the manufacturer's recommendations. Remixing or tempering isn't permitted. Do not reuse rebound materials.

Apply lining product to all exposed concrete surfaces, including bench, pipe penetrations, interior structure walls, ceilings, and chimney. Do not apply to flow channel. Application must consistently achieve uniform compaction with low percentage of rebound and no visible sag.

Lining shall be terminated by keying into the concrete per 00492.41(c). Prior to application of lining, the saw cut shall be dried and vacuumed to remove all dust and residue. During lining application, a liberal amount of material shall be applied to the saw cut area and smoothed level.

For pipes protruding from the manhole wall, manhole lining shall overlap the pipe along the outside surface of the protruding pipe. For pipes terminating flush with the existing manhole wall, cut a circular groove around the existing pipe penetration and extend lining to the edge of the circumference of the pipe. Do not extend lining into the pipe.

Install lining to the thickness necessary to qualify as a monolithic (void free) liner. Finish horizontal surfaces with wood float, sponge float, broom, or brush to produce a textured surface, or as recommended by the manufacturer.

	Liner Thickness (mils)		
Depth	**48-inch**	**60-inch**	**72-inch**
<5 feet	750	950	1100
5 feet to 10 feet	800	1000	1200

10 feet to 15 feet	1000	1250	1500
15 feet to 20 feet	1100	1375	1650
20 feet to 25 feet	1200	1500	1800
25 feet to 30 feet	1300	1625	1950

Do not add hot air to the manhole to accelerate set time of the lining.

00492.43 Protective Coating - Existing concrete must be completely dry and prepared per the manufacturer's instructions. Apply coating to all exposed concrete in the manhole, including bench, pipe penetration(s), interior structure walls, ceilings, and chimney. Do not apply coating to flow channel. Applied materials must consistently achieve uniform compaction with low percentage of rebound and no visible sag. Apply coating according to the manufacturer's instructions. Temperature of the surface to be coated shall be maintained between 70 degrees F and 110 degrees F during application. Prior to and during application, care should be taken to avoid exposure of direct sunlight or other intense heat sources to the structure being coated.

Coating shall be terminated by keying into the concrete or structural lining per 00492.41(c). Prior to application of coating, the saw cut shall be dried and vacuumed to remove all dust and residue. During coating application, a liberal amount of material shall be applied to the saw cut area and smoothed level.

For pipes protruding from the manhole wall, manhole coating shall overlap the pipe along the outside surface of the protruding pipe. For pipes terminating flush with the existing manhole wall, cut a circular groove around the existing pipe penetration and extend coating to the edge of the circumference of the pipe. Do not extend lining into the pipe.

	Coating Thickness (mils)		
Depth	**48-inch**	**60-inch**	**72-inch**
<5 feet	125	125	125
5 feet to 10 feet	125	125	125
10 feet to 15 feet	150	150	150
15 feet to 20 feet	175	200	200
20 feet to 25 feet	225	225	225
25 feet to 30 feet	250	275	275

Coating must reach a tack-free condition before being restoring active flow to the manhole.

00492.45 Visual Inspection - At certain hold points in the rehabilitation process, request approval to proceed with the next stage of the application process. The designated inspection hold points for each installation are:

- Completion of surface repairs, re-profiling, and preparation.
- Completion of each application of cementitious lining (if used).

Provide 24-hour notice that approval of an inspection hold point is needed. The Engineer will respond to the request within 24 hours. Visual inspection includes:

- Zero groundwater infiltration.
- All pipe connections are open and clear.
- No cracks, voids, dry spots, delamination or other types of defects of the newly applied material are visible.

Finishing and Clean Up

00492.70 Cleanup - Remove surplus materials, protective coverings, accumulated rubbish, and thoroughly clean all surfaces. Repair any overspray, splashes, splatters or other rehabilitation-related damage after approval of the work. Surfaces damaged from this clean up shall also be cleaned, repaired and refinished to the original condition or as approved.

00492.71 Testing – Perform the following tests after the application and cure of the manhole rehabilitation products. Tests shall be conducted by a NACE certified inspector.

(a) Thickness - Measure the minimum thickness of the manhole rehabilitation system with a digital coating thickness gauge or a wet film gauge in the presence of the Engineer. Repair all verification points upon acceptance of the thickness tests.

For structural lining, test a minimum of four equally spaced points around the circumference of the manhole wall. Conduct tests every 10 vertical feet, starting at a point 1 foot above the manhole bench or base in the absence of a bench. For manholes less than 11 feet deep, conduct thickness tests at a point equidistant from the bench / base of the manhole and the top of the applied liner.

(b) Adhesion Testing of Structural Liner to Substrate – Conduct one test every 5 vertical feet. For structural liners less than 5 feet deep, conduct adhesion tests at a point equidistant from the bottom of the structural liner and the top of the applied liner. Remove and replace areas not meeting required 150 psi at 28 days minimum adhesion requirement (or resulting in substrate failure).

(c) Adhesion Testing of Protective Coating to Substrate - Conduct one test every 5 vertical feet. For coatings less than 5 feet deep, conduct adhesion tests at a point equidistant from the bottom of the structural liner and the top of the applied liner. Remove and replace areas not meeting required 150 psi at 28 days minimum adhesion requirement (or resulting in substrate failure).

(d) Spark Testing of Protective Coating – Use high-voltage holiday detection equipment to test for imperfections in the coating. Surface shall first be dried, confirmed to be tack-free, and then make an induced holiday on the coated concrete surface to determine the minimum and maximum voltage to be used to test the coating for holidays in that particular area. Set the spark tester initially at 100 volts per 1 mil (25 microns) of film thickness applied and adjust as necessary to detect the induced holiday (refer to NACE SPO188-06, Discontinuity Holiday Testing of New Protective Coatings on Conductive Substrates, or ASTM D4787 Continuity Testing of Liquid or Sheet Liners On Concrete -Holidays). Mark and repair all detected holidays by abrading the coating surface with grit disk paper or other hand-tooling method. After abrading and cleaning, hand-apply additional epoxy coating material to the repair area as needed, following the epoxy coating manufacturer's recommendations for all touch-ups and repairs. Any necessary re-testing is at no additional cost.

Measurement

00492.80 Measurement – The quantities of manhole rehabilitation will be measured on an each basis for each manhole rehabilitated.

Payment

00492.90 Payment – The accepted quantities of work performed under this Section will be paid for at the Contract unit price, per unit of measurement for the following items:

Pay Item	Unit of Measurement
(a) Rehabilitate Manhole	Each

Payment will be payment in full for furnishing and placing all materials, and for furnishing all equipment, tools, labor, and incidentals necessary to complete full structural lining and protective coating of the manholes as specified. Manhole steps will not be installed or replaced post manhole rehabilitation.

Flow diversion will be paid for according to 00490.

SECTION 00495 - TRENCH RESURFACING

Comply with Section 00495 of the Standard Specifications modified as follows.

00495.00 Scope – Add to the end of this subsection the following:

Comply with the City of Roseburg and Douglas County trench resurfacing standards. In the case of any conflict, the requirements of the agency have roadway jurisdiction will take precedence.

SECTION 00610 - RECONDITIONING EXISTING ROADWAY

Comply with Section 00610 of the Standard Specifications.

SECTION 00620 - COLD PLANE PAVEMENT REMOVAL

Comply with Section 00620 of the Standard Specifications modified as follows:

00620.40(a) General - Replace this subsection, except for the subsection number and title, with the following:

Remove the existing pavement to the depth, width, grade and cross section shown or as directed. The use of a heating device to soften the pavement is not allowed.

00620.43 Maintenance Under Traffic - Replace this subsection, except for the subsection number and title, with the following:

Traffic is not allowed on the cold planed surface. Before opening the area to traffic, pave the surface according to 00744.51.

SECTION 00641 - AGGREGATE SUBBASE, BASE AND SHOULDERS

Comply with Section 00641 of the Standard Specification modified as follows:

00641.80 Measurement - Replace this subsection, except for the subsection number and title, with the following:

No measurement will be made for this work, as it is considered incidental to other work on this project.

00641.90 Payment - Replace this subsection, except for the subsection number and title, with the following:

No payment will be made for this work, as it is considered incidental to other work on this project.

SECTION 00730 - EMULSIFIED ASPHALT TACK COAT

Comply with Section 00730 of the Standard Specifications modified as follows:

00730.90 Payment - Replace this subsection, except for the subsection number and title, with the following:

No separate or additional payment will be made for emulsified asphalt tack coat.

SECTION 00744 - ASPHALT CONCRETE PAVEMENT

Comply with Section 00744 of the Standard Specifications modified as follows:

00744.11(a) Asphalt Cement - Add the following to the end of this subsection:

Provide PG 64-22 and PG 70-22ER grade asphalt cement for this Project.

00744.49 Compaction - In the paragraph that begins "Determine compliance with…", replace "WAQTC T 8" with "AASHTO T 355".

Add the following subsection:

00744.51 Opening Sections to Traffic - Schedule work so that, during the same shift, the surfaces being paved are paved full width and length through the wearing course before opening to traffic.

SECTION 00745 – HOT MIXED ASPHALT CONCRETE

Comply with Section 00746 of the Standard Specifications.

SECTION 00746 – CRACK SEALING FLEXIBLE PAVEMENTS

Comply with Section 00746 of the Standard Specifications.

SECTION 00748 - ASPHALT CONCRETE PAVEMENT REPAIR

Comply with Section 00748 of the Standard Specifications.

SECTION 00749 - MISCELLANEOUS ASPHALT CONCRETE STRUCTURES

Comply with Section 00749 of the Standard Specifications modified as follows:

00749.44 Placing Asphalt Concrete - Replace the paragraph that begins "Construct all structures within…" and the bullet list with the following paragraph and bullet list:

Construct all structures within the following lines and grades:

- 0.08 foot of true line
- 0.04 foot of established surface grade, cross section and slope
- 0.04 foot of specified thickness

SECTION 00759 - MISCELLANEOUS PORTLAND CEMENT CONCRETE STRUCTURES

Comply with Section 00759 of the Standard Specifications modified as follows:

00759.46 Concrete - Add the following sentence after the first sentence:

Before placing concrete, verify that forms are correctly positioned to produce sidewalk ramps with proper slopes and dimensions to comply with the City of Roseburg Standard Details when located on City Streets or ODOT Standard Drawings when located on ODOT ROW.

00759.90 Payment – Replace this section with the following:

The accepted quantities of structures will be paid for at the Contract unit price, per unit of measurement, for the following items:

Pay Item	Unit of Measurement
(a) Concrete Curbs,	Foot or Cubic Yard
(b) Concrete Walks	Square Foot

In Item (a) the type of curb will be inserted in the blank, if appropriate. Item (a) includes additional curb replacement beyond the sidewalk ramp pay limits shown in the plans. Additional curb lengths shall be approved by RUSA prior to removal of existing curb. The Work includes saw cutting and removing existing curb, gutter, and curb and gutter and replacing them with new curb, gutter or curb and gutter.

Item (b) includes additional concrete walk replacement beyond the sidewalk ramp pay limits shown in the plans. Additional concrete walk areas shall be approved by RUSA prior to removal of existing sidewalk panels. The Work includes saw cutting and removing existing sidewalk panels and replacing them with new sidewalk panels.

Payment will be payment in full for furnishing and placing materials, and for furnishing all equipment, labor, and incidentals necessary to complete the work as specified.

No separate or additional payment will be made for Sidewalk Ramp Working Drawings, Sidewalk Ramp Plan, Preplacement Conference, concrete form verification, saw cutting, earthwork, aggregate base and any necessary repair or removal and replacement of Sidewalk Ramps.

SECTION 00850 - COMMON PROVISIONS FOR PAVEMENT MARKINGS

Comply with Section 00850 of the Standard Specifications.

SECTION 00860 - LONGITUDINAL PAVEMENT MARKINGS – PAINT

Comply with Section 00860 of the Standard Specifications.

SECTION 01020 - LANDSCAPE RESTORATION

Section 01020, which is not a Standard Specifications, is included in the Project by Special Provision.

Description

01020.00 Scope – This work consists of restoring landscaped areas disturbed by the course of the project work. Landscaped areas within the Project area and those within trench limits

of pipeline installation shall be replaced. All other landscaped areas disturbed by the course of the project work shall be restored to like-new condition.

01020.01 Definitions –

Landscaping – Any item of relating to lawn grass, shrubs, trees, fences, mailboxes, gravel beds and blankets, rock features, irrigation facilities, lighting, water features, outdoor furniture, patios, hardscape, decorations, awnings, weather instrumentation, and walls.

Construction

01020.10 General – Landscaping work shall be performed in accordance with the applicable sections listed in Part 01000.

Any landscaping and/or personal property disturbed by construction activities shall be repaired or replaced by the Contractor to existing or better conditions unless otherwise listed in the Special Provisions.

Measurement

01020.80 Measurement - No measurement will be made for this work, as it is considered incidental to other work on this project.

Payment

01020.90 Payment – Landscape restoration will be paid for at the Contract lump sum amount for the item "Landscape Restoration Complete".

Payment will be payment in full for furnishing, installing, moving, operating, maintaining, inspecting, and removing materials, and for furnishing all equipment, labor, and incidentals necessary to complete work as specified.

SECTION 01030 - SEEDING

Comply with Section 01030 of the Standard Specifications modified as follows:

01030.90 Payment – Remove and Replace this Section with the following:

Seeding and associated work performed under this Section shall be considered incidental to the Contract unless otherwise listed in the Special Provisions.

SECTION 01040 - PLANTING

Comply with Section 01040 of the Standard Specifications modified as follows:

01040.90 Payment – Remove and Replace this Section with the following:

Planting and associated work performed under this Section shall be considered incidental to the Contract unless otherwise listed in the Special Provisions.

SECTION 02001 - CONCRETE

Comply with Section 02001 of the Standard Specifications.

SECTION 02010 - PORTLAND CEMENT

Comply with Section 02010 of the Standard Specifications modified as follows:

02010.10(b) Specifications - Replace this subsection, except the subsection number and title, with the following:

Portland cement shall conform to the requirements of AASHTO M 85 or ASTM C150 for low alkali cement except as follows:

- Cement shall have a total alkali content (sodium and potassium oxide calculated as $Na_2O + 0.658\ K_2O$) not exceeding 0.60 percent.
- All cement types shall contain a maximum of 8 percent tricalcium aluminate(C_3A).
- The time-of-setting tests will be by either the Gillmore test or the Vicat test.
- Types I and II maximum fineness (specific surface) as determined by AASHTO T153 air permeability test shall be 430 m^2/kg. If $C_3S + 4.75\ C_3A$ is less than or equal to 90, the fineness criteria does not apply.

02010.20 Blended Hydraulic Cement - Replace the paragraph that begins "Blended hydraulic cement…" with the following paragraph:

Blended hydraulic cement shall be either Type IS-Portland blast-furnace slag cement, Type IP-Portland-pozzolan cement, or Type IT-ternary blended cement according to AASHTO M 240, modified as follows:

Add the following paragraph to the end of this subsection:

Furnish blended hydraulic cement from the QPL.

SECTION 02015 - PORTLAND CEMENT CONCRETE REPAIR MATERIAL

Comply with Section 02015 of the Standard Specifications modified as follows:

Add the following subsection:

02015.50 Portland Cement Concrete Repair, Surface - Furnish Surface PCC repair material from the QPL.

SECTION 02050 - CURING MATERIALS

Comply with Section 02050 of the Standard Specifications.

SECTION 02070 – BONDING AGENTS

Comply with Section 02070 of the Standard Specifications.

SECTION 02080 - GROUT

Comply with Section 02080 of the Standard Specifications.

SECTION 02221 – REPAIR, RESURFACING, AND LINING MATERIALS FOR MANHOLE REHABILITATION

Section 02221, which is not a Standard Specification, is included in this Project by Special Provision.

Description

02221.00 Scope - This Section includes the requirements for cleaning, repair, and lining system materials used in manhole rehabilitation.

02221.01 Reference Standards - Furnish materials conforming to the requirements of:

ACI 506.2-77	Specifications for Materials, Proportioning, and Application of Shotcrete
ASTM C109	Compressive Strength Hydraulic Cement Mortars
ASTM C579	Compressive Strength of Chemically Setting Silicate and Silica Chemical Resistant Mortars
ASTM C1583M	Tensile Strength of Concrete Surfaces and the Bond Strength or Tensile Strength of Concrete Repair and Overlay Materials by Direct Tension (Pull-Off Method)
ASTM D638	Tensile Properties of Plastics
ASTM D790	Flexural Properties of Unreinforced and Reinforced Plastics
ASTM D695	Compressive Properties of Rigid Plastics
ASTM D2240	Durometer Hardness, Type Shore D 80 – 85%
ASTM D4541	Pull-off Strength of Coatings Using a Portable Adhesion Tester
ASTM D7234	Pull-Off Adhesion Strength of Coatings on Concrete Using Portable Pull-Off Adhesion Testers ASTM D2584 Volatile Matter Content.
ASTM D543	Resistance of Plastics to Chemical Reagents

02221.02 General - Use materials meeting the following minimum requirements:

- All component materials shall be easily transportable by common carriers.
- Packing of component materials shall be compatible with field storage requirements.
- Components shall be packed in such a fashion as to provide for maximum worker safety when handling the materials and minimize spillage when preparing for use.
- Mixing of the components shall be compatible with field applications, not require precise measurements, and be within the limits recommended by the manufacturer.

- Catalyzation shall take place at the point of repair.

- Cleanup shall be done without inordinate use of flammable or hazardous chemicals.

Materials

02221.11 Wall Cleaning:

- Use clean water.

- Use detergent or muriatic acid capable of removing dirt, grease, oil and other matter which would prevent a good bond of lining material to wall. Apply in accordance with the manhole rehabilitation system manufacturer's recommendations.

02221.12 Repair and Resurfacing Products - Repair materials must be compatible with the specified rehabilitation system and applied in accordance with the manufacturer's recommendations.

(a) General - The following products may be accepted and approved as compatible repair and resurfacing products for use:

- 100% solids, solvent-free epoxy grout specifically formulated for polyurethane or epoxy topcoating compatibility.

- When approved for use by the manufacturer, factory blended, rapid setting, high early strength, fiber reinforced, non-shrink repair mortar that can be trowelled or pneumatically spray applied may be approved if specifically formulated to be suitable for topcoating with the specified rehabilitation product(s).

(b) Repair and Resurfacing – Use repair materials compatible with the specified rehabilitation method and applied in accordance with the recommendations of the manufacturers of both the repair material and the rehabilitation material.

The following products may be accepted and approved as compatible repair and resurfacing basecoat materials:

(1) Repair Mortar - When approved for use by the rehabilitation material manufacturer, factory blended, rapid setting, high early strength, non-shrink repair mortar that can be troweled or pneumatically spray applied may be approved if specifically formulated to be suitable for topcoating with the specified rehabilitation product(s). Such repair mortars shall not be used unless the rehabilitation system manufacturer(s) provides information as to its compatibility with the rehabilitation system products. Project-specific submittals shall be provided including application, cure time and surface preparation procedures that permit optimum bond strength with the rehabilitation material.

(2) Wall Patch - Wall patch shall be a quick-setting cementitious material and compatible with the rehabilitation material. Mix and apply according to manufacturer's recommendations. Wall patch shall have the following minimum physical properties:

Property	Minimum Value
Compressive Strength (ASTM C 109B) ……	1,400 psi, 1 hour 2,000 psi, 24 hours
Shrinkage (ASTM C 596) ……	<0.06% at 90% R.H.
Bond Strength (ASTM C 321) ……	900 psi, 24 hours
Flexural Strength ……..	500 psi, 24 hour, 900 psi, 28 days
Cement ……..	Sulfate resistant
Density, when applied ……..	105 +/- 5 pcf

(c) Leak Control – Use hydraulic cement (a rapid setting cementitious product specifically formulated for leak control) to stop minor water infiltration. Mix and apply according to manufacturer's recommendations. Hydraulic cement must have the following minimum physical properties:

Property	Minimum Value
Compressive Strength (ASTM C-109) ……	600 psi, 6 hours and 2,000 psi, 24 hours
Shrinkage (ASTM C 596) ……	<0.06% at 90% R.H.
Bond Strength (ASTM C 321) ……..	40 psi, 1 hour and 80 psi, 24 hours

The hydraulic cement shall require no additives, set in 45-90 seconds, be dimensionally stable, and freeze/thaw and sulfate resistant.

02221.13 Primer – Use primers for specific substrates as recommended by the rehabilitation system manufacturer, or as listed below:

- Concrete: Sikaflex 429 primer, or approved equal
- Metal: Sikaflex 260 primer, or approved equal
- Plastic: Sikaflex 449 primer, or approved equal

02221.14 Corrosion Inhibitor for Reinforced Steel – Use a water-based epoxy resin, anti-corrosion coating and bonding agent such as Armatec 110 EpoCem, manufactured by the Sika Corporation, or approved equal.

02221.15 Rehabilitation Materials - Engineered materials applied as a system to restore or augment the structural capacity of existing manholes and/or protect against corrosion.

(a) Structural Lining Material - Material shall have the following minimum physical properties:

Property	Minimum Value
Compressive Strength (ASTM C109)	4,000 psi, 24 hours and 9,000 psi, 28 days
Flexural Strength (ASTM C293)	400 psi, 24 hours and

1,250 psi, 28 days
Tensile Strength (ASTM C496) ..... 700 psi, 28 days
Shrinkage, RH 90% (ASTM C596)……..0.01%, 28 days
Bond Strength……..Substrate failure
Freeze/Thaw after 300 Cycles (ASTM C666)…….....No visible damage after 300 cycles

The physical requirements must be verified by an independent, certified, third-party testing laboratory within the last five years. The material shall have zero sag when applied in a single coat of 1-inch or less.

Product and manufacturer:

- Mainstay ML-72, Madewell Products Corporation • MS-2A, Strong Seal
- or approved equal.

(b) Protective Coating Material - Furnish protective coating materials resistant to hydrogen sulfide. Approved materials for hydrogen sulfide resistance include epoxy and polyurethane materials.

Epoxy shall have the following minimum physical properties:

Property	**Value**
Compressive Strength (ASTM D695)……	16,000 psi min.
Flexural Modulus (ASTM D790)……..…......	600,000psi min
Flexural Strength (ASTM D790)…….....	8,000 psi min.
Tensile Strength (ASTM D638) ……..	7,600 psi min.
Elongation (ASTM D638)……..	3% min.
Hardness, Shore D (ASTM D2240)……...	88 min.
Acid Exposure……	pH 1, H_2SO_4
Adhesion, Concrete (ASTM D7234)……	Substrate Failure
Abrasion (ASTM D4060)…….……	112 mg loss/1,000 cycles, max.

The physical requirements must be verified by an independent, certified, third-party testing laboratory within the last five years. The material shall be 100% epoxy solids (by volume), with zero shrinkage (wet film thickness and dry film thickness shall be the same), and be 100% free of Volatile Organic Compounds.

Product and manufacturer:

- Raven 405, Raven Lining Systems
- Epoxytec CPP, Epoxytec International Inc.
- or approved equal.

02221.70 Acceptance - Acceptance of repair, resurfacing and lining materials for manhole rehabilitation will be according to 00165.35 and this Section.

SECTION 02415 – PLASTIC PIPE

Comply with Section 02415 of the Standard Specifications.

SECTION 02440 – JOINT MATERIALS

Comply with Section 02440 of the Standard Specifications modified as follows:

02440.15 Lubricant/Adhesive - Replace this subsection, except for the subsection number and title, with the following:

Furnish a lubricant/adhesive conforming to ASTM D 4070 and according to the recommendations of the seal manufacturer.

002440.50(b) Non-Epoxy (Non-Shrink) Grout - Replace this subsection, except for the subsection number and title, with the following:

Furnish a non-epoxy (non-shrink) grout according to 02080.30. Place or pack non-epoxy (non-shrink) grouts only with the use of a non-epoxy bonding agent according to 02070.20, applied to all cured concrete surfaces being grouted. Use a bonding agent compatible with the grout used.

SECTION 02450 - MANHOLES AND INLET MATERIALS

Comply with Section 02450 of the Standard Specifications modified as follows:

Add the following Subsection:

02450.15 Precast Concrete Catch Basins and Inlets - Furnish precast concrete catch basins and inlet conforming to the requirements of ASTM C 913.

SECTION 02630 – BASE AGGREGATES

Comply with Section 02630 of the Standard Specifications.

SECTION 02690 – PCC AGGREGATES

Comply with Section 02690 of the Standard Specifications.

ROSEBURG URBAN SANITARY AUTHORITY

SANITARY SEWER STANDARDS TABLE OF CONTENTS

001. TABLE OF CONTENTS

290 – ENVIRONMENTAL PROTECTION
290–100. WATER/SEWER SEPARATION

445 – SANITARY PIPE DETAILS
445–100. TYPICAL MAINLINE TRENCH
445–110. TYPICAL BUILDING SEWER TRENCH
445–120. STANDARD CLEANOUT
445–130. TYPICAL SHALLOW BUILDING SEWER
445–140. TYPICAL DEEP BUILDING SEWER
445–150. NEW DEVELOPMENT SANITARY SEWER LOCATION
445–160. SEWER MAIN EASEMENT SPECIFICATIONS

470 – SANITARY MANHOLE DETAILS
470–100. STANDARD SANITARY SEWER MANHOLE
470–110. OUTSIDE DROP DETAIL
470–120. INSIDE DROP WITH BEAVER SLIDE
470–130. PIPED INSIDE DROP DETAIL
470–140. TYPICAL POUR IN PLACE MANHOLE BASE
470–150. STANDARD FRAME AND COVER
470–160. MANHOLE APRON

490 – EXISTING SEWERS/STRUCTURES
490–100. ABANDONED MANHOLE
490–110 NEW BUILDING PROXIMITY TO SEWER

ABBREVIATIONS

MIN	MINIMUM
MAX	MAXIMUM
TYP	TYPICAL
MH	MANHOLE
$\mathbb{C}_L$	CENTERLINE
PSI	POUNDS PER SQUARE INCH
DIA	DIAMETER
PVC	POLYVINYL CHLORIDE
HDPE	HIGH DENSITY POLYETHYLENE
O.D.	OUTER DIAMETER
IN	INCH
FT	FOOT
STD	STANDARD
DWG	DRAWING
AC	ASPHALT CONCRETE
CLSM	CONTROLLED LOW STRENGTH MATERIAL
ODOT	OREGON DEPARTMENT OF TRANSPORTATION
RUSA	ROSEBURG URBAN SANITARY AUTHORITY
ASTM	AMERICAN SOCIETY FOR TESTING AND MATERIALS

DRAWN	JJB
REVIEWED	RMK
APPROVED	JVB
REVISION DATE	6/19/2019
	3/13/2019
	12/17/2018

PROJECT NAME: SANITARY SEWER STANDARDS

TITLE: TABLE OF CONTENTS

ROSEBURG URBAN SANITARY AUTHORITY
1297 NE GRANDVIEW DR.
P.O. BOX 1185
ROSEBURG OR, 97470
PHONE: (541)-672-1551

SCALE: NTS

SHEET NO. 001

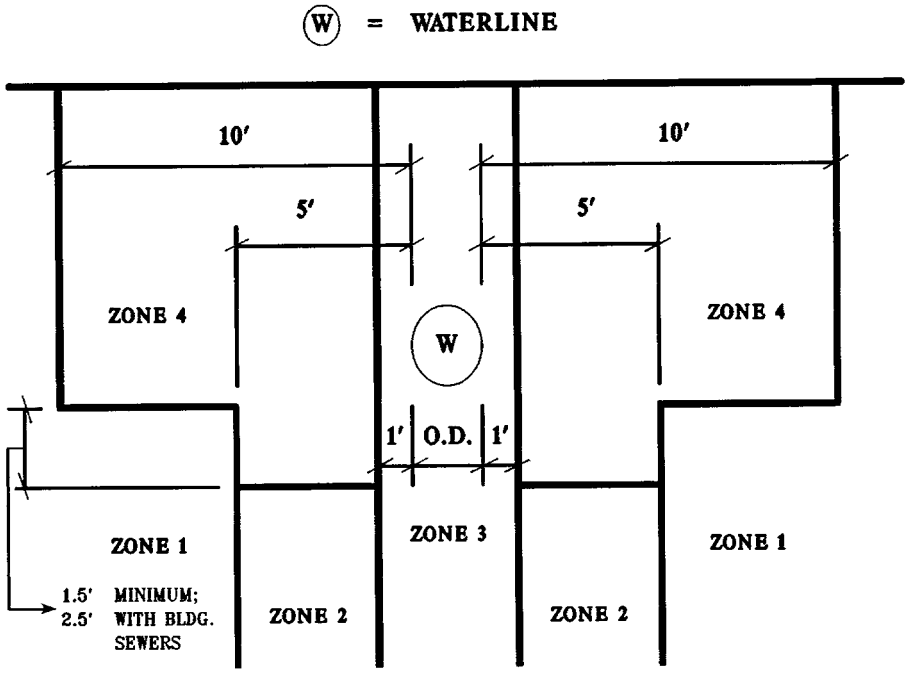

SEWER LINE ZONES

ZONE 1 SEWER LINE CAN BE LAID IN THIS AREA WITH NO SPECIAL REQUIREMENTS OF EITHER CONSTRUCTION OR MATERIALS.

ZONE 2 INSTALLING A SEWER LINE IN THIS ZONE IS NOT ADVISABLE AND MUST BE JUSTIFIED IN EACH CASE. WATER LINE SHOULD BE LOCATED ON A BENCH OF UNDISTURBED EARTH WHEN CONSTRUCTED CONCURRENTLY IN A COMMON TRENCH WITH SEWER LINE.

ZONE 3 INSTALLING A SEWER MAIN DIRECTLY OVER A WATER MAIN OR DIRECTLY UNDER A WATER MAIN IN THIS ZONE IS PROHIBITED SINCE TAPPING AND O. & M. OF EACH LINE WOULD BE IMPAIRED.

ZONE 4 SEWER LINE CONSTRUCTION IN THIS ZONE WOULD GENERALLY NOT BE PERMITTED. EACH INSTALLATION MUST BE JUSTIFIED. IF CONSTRUCTION WAS PERMITTED, PRESSURE PIPE MATERIALS FOR THIS SEWER LINE WOULD BE REQUIRED.

Effective 9/1/81

FIGURE A-1

SEPARATION OF PARALLEL WATER-SEWER LINES

1. PARALLEL WATER AND SEWER LINES: SEWER LINES SHOULD CONFORM TO FIGURE A–1. COMMON TRENCH CONSTRUCTION FOR WATER AND SEWER SHOULD BE AVOIDED WHERE PRACTICAL. WHERE USED, THE MINIMUM SEPERATIONS OF FIGURE A–1 SHOULD BE MAINTAINED.
2. VERTICAL SEPARATION FOR CROSSINGS OF WATER AND SEWER LINES: NO SPECIAL PRECAUTIONS SHOULD BE NECESSARY WHERE TOP OF SEWER LINE IS AT LEAST 1.5 FEET BELOW BOTTOM OF WATER LINE AND ADEQUATE STRUCTURAL PROTECTION FOR EACH LINE IS PROVIDED.

DRAWN JJB	PROJECT NAME SANITARY SEWER STANDARDS	
REVIEWED RMK	TITLE WATER/SEWER SEPARATION	
APPROVED JVB		
REVISION DATE	ROSEBURG URBAN SANITARY AUTHORITY 1297 NE GRANDVIEW DR. P.O. BOX 1185 ROSEBURG OR, 97470 PHONE: (541)-672-1551	SCALE: NTS / SHEET NO. 290-100
6/19/2019		
12/17/2018		
12/14/2018		

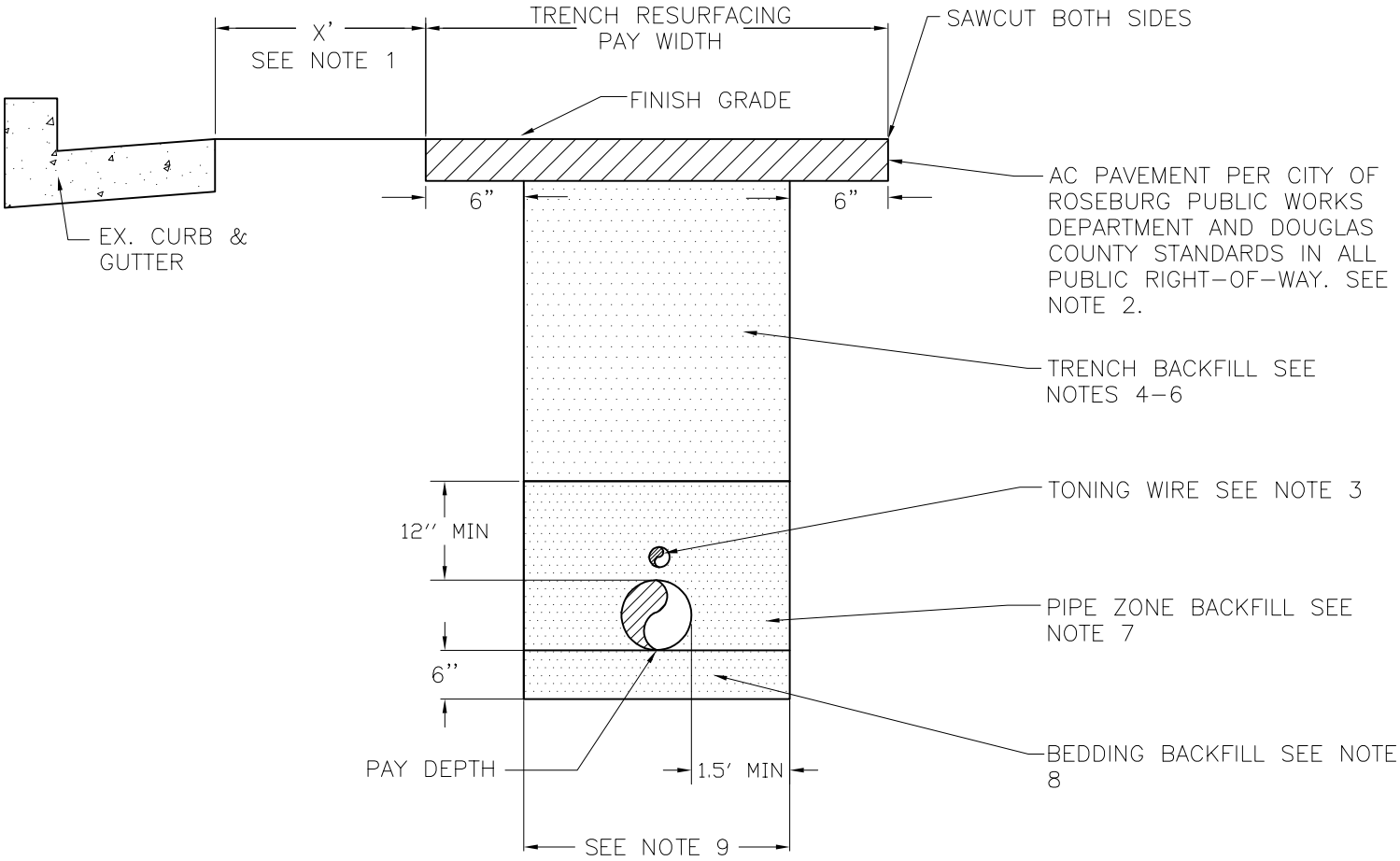

TYPICAL SEWER MAINLINE TRENCH

NOTES:

1. WHEN X IS LESS THAN 5', CONTRACTOR SHALL REMOVE AND REPLACE AC PAVEMENT TO CURB AND/OR GUTTER PER CITY OF ROSEBURG.

2. WHEN SEWER MAINLINE IS NOT LOCATED IN PUBLIC RIGHT-OF-WAY, AC SHALL BE PER APPROVED PLANS.

3. TONING WIRE TO BE TAPED TO PIPE EVERY 10'. FOR TONING WIRE SPECIFICATIONS, SEE ODOT STANDARD SPECIFICATION 00445.12 PARAGRAPH E.

4. TRENCH BACKFILL IN RIGHT-OF-WAY SHALL BE CLASS "E" CONTROLLED LOW STRENGTH MATERIAL (CLSM) OR CLASS "B" IF APPROVED.

5. WHEN SEWER LINE IS IN UNPAVED AREAS OUTSIDE OF RIGHT-OF-WAY, TRENCH BACKFILL MATERIAL SHALL BE CLASS "A".

6. WHEN SEWER LINE IS IN PAVED AREAS OUTSIDE OF THE RIGHT-OF-WAY, TRENCH BACKFILL MATERIAL SHALL BE CLASS "B".

7. PIPE ZONE BACKFILL SHALL BE CLASS "B" 3/4"-0" UNLESS OTHERWISE APPROVED.

8. BEDDING MATERIAL SHALL BE CLASS "B" 3/4"-0" UNLESS OTHERWISE APPROVED.

9. 5' TYP TRENCH WIDTH FOR PIPE 24" OR LESS, 7' TYP TRENCH WIDTH FOR PIPE 24"-48"

BACKFILL MATERIAL CLASSES PER 2015 ODOT STANDARD SPECIFICATIONS 00405.14

DRAWN JJB	PROJECT NAME SANITARY SEWER STANDARDS	
REVIEWED RMK	TITLE TYPICAL MAINLINE TRENCH	
APPROVED JVB		
REVISION DATE	ROSEBURG URBAN SANITARY AUTHORITY 1297 NE GRANDVIEW DR. P.O. BOX 1185 ROSEBURG OR, 97470 PHONE: (541)-672-1551	SCALE: NTS / SHEET NO. 445-100
6/19/2019		
6/10/2019		
5/24/2019		

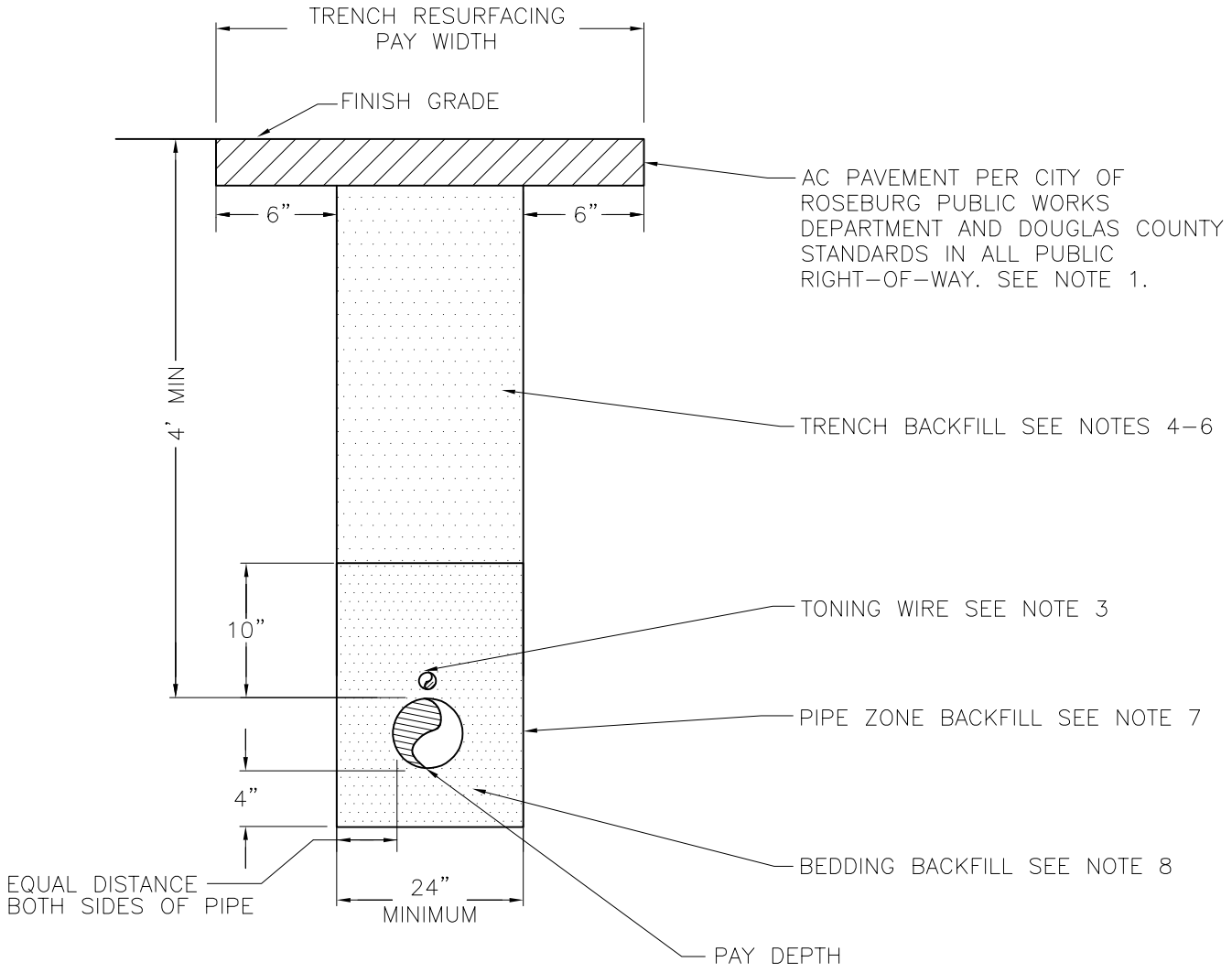

TYPICAL 4" OR 6" BUILDING SEWER TRENCH

NOTES:

1. WHEN SEWER MAINLINE IS NOT LOCATED IN PUBLIC RIGHT-OF-WAY, AC SHALL BE PER APPROVED PLANS.

2. TYPICAL DEPTH OF COVER OVER SEWER LATERAL AT PROPERTY LINE/RIGHT-OF-WAY SHALL BE 4' MINIMUM.

3. TONING WIRE TO BE TAPED TO PIPE EVERY 10'. FOR TONING WIRE SPECIFICATIONS, SEE ODOT STANDARD SPECIFICATION 00445.12 PARAGRAPH E.

4. TRENCH BACKFILL IN RIGHT-OF-WAY SHALL BE CLASS "E" CONTROLLED LOW STRENGTH MATERIAL (CLSM) OR CLASS "B" IF APPROVED.

5. WHEN SEWER LINE IS IN UNPAVED AREAS OUTSIDE OF RIGHT-OF-WAY, TRENCH BACKFILL MATERIAL SHALL BE CLASS "A".

6. WHEN SEWER LINE IS IN PAVED AREAS OUTSIDE OF THE RIGHT-OF-WAY, TRENCH BACKFILL MATERIAL SHALL BE CLASS "B".

7. PIPE ZONE BACKFILL SHALL BE CLASS "B" 3/4"-0" UNLESS OTHERWISE APPROVED.

8. BEDDING MATERIAL SHALL BE CLASS "B" 3/4"-0" UNLESS OTHERWISE APPROVED.

BACKFILL MATERIAL CLASSES PER 2015 ODOT STANDARD SPECIFICATIONS 00405.14

DRAWN JJB	PROJECT NAME SANITARY SEWER STANDARDS	
REVIEWED RMK	TITLE TYPICAL BUILDING SEWER TRENCH	
APPROVED JVB		
REVISION DATE	ROSEBURG URBAN SANITARY AUTHORITY 1297 NE GRANDVIEW DR. P.O. BOX 1185 ROSEBURG OR, 97470 PHONE: (541)-672-1551	SCALE: NTS / SHEET NO. 445-110
6/19/2019		
6/10/2019		
5/24/2019		

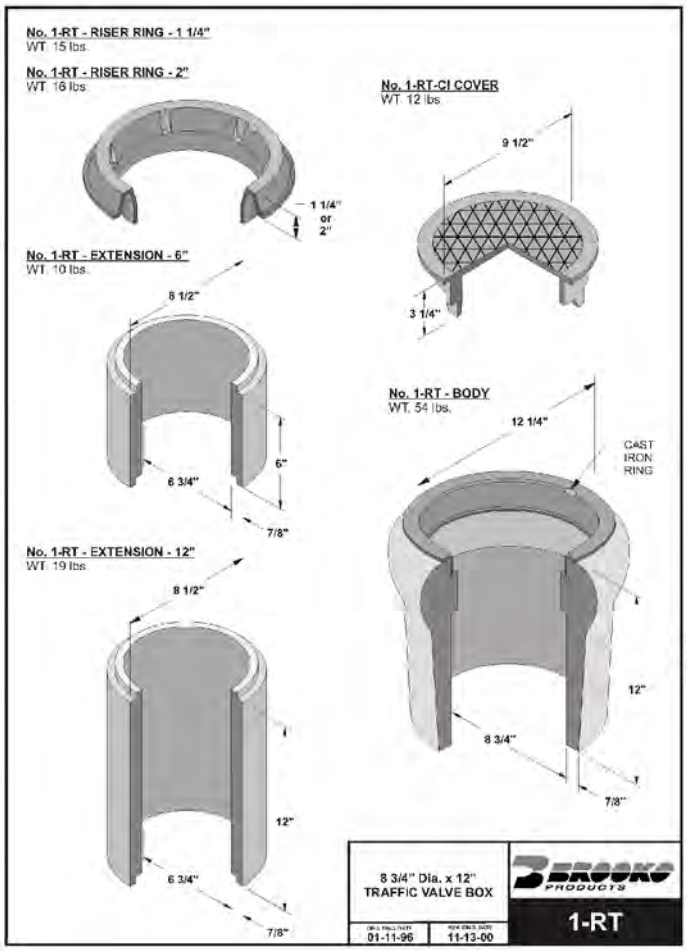

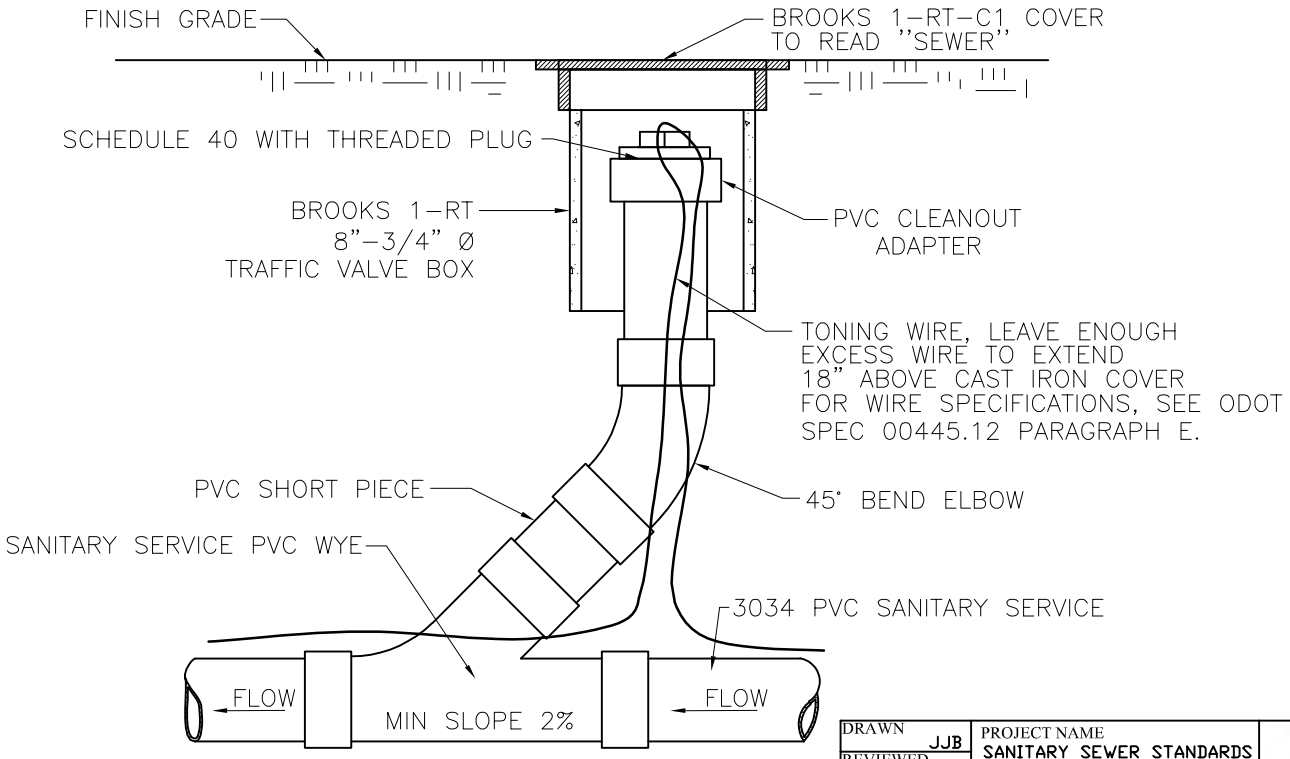

STANDARD 4"-6" BUILDING SEWER CLEANOUT

DRAWN JJB	PROJECT NAME SANITARY SEWER STANDARDS	
REVIEWED RMK	TITLE CLEANOUT	
APPROVED JVB	ROSEBURG URBAN SANITARY AUTHORITY 1297 NE GRANDVIEW DR. P.O. BOX 1185 ROSEBURG OR, 97470 PHONE: (541)-672-1551	
REVISION DATE		
6/19/2019		
12/18/2018		SCALE: NTS / SHEET NO. 445-120
12/17/2018		

SHALLOW TRENCH BUILDING SEWER PLAN

1. MANUFACTURED TEE FITTING ON NEW SEWERS 24" AND SMALLER
2. USE INSERT-A-TEE ON ALL EXISTING SEWER MAINS (RUSA SHALL INSTALL INSERT-A-TEE)

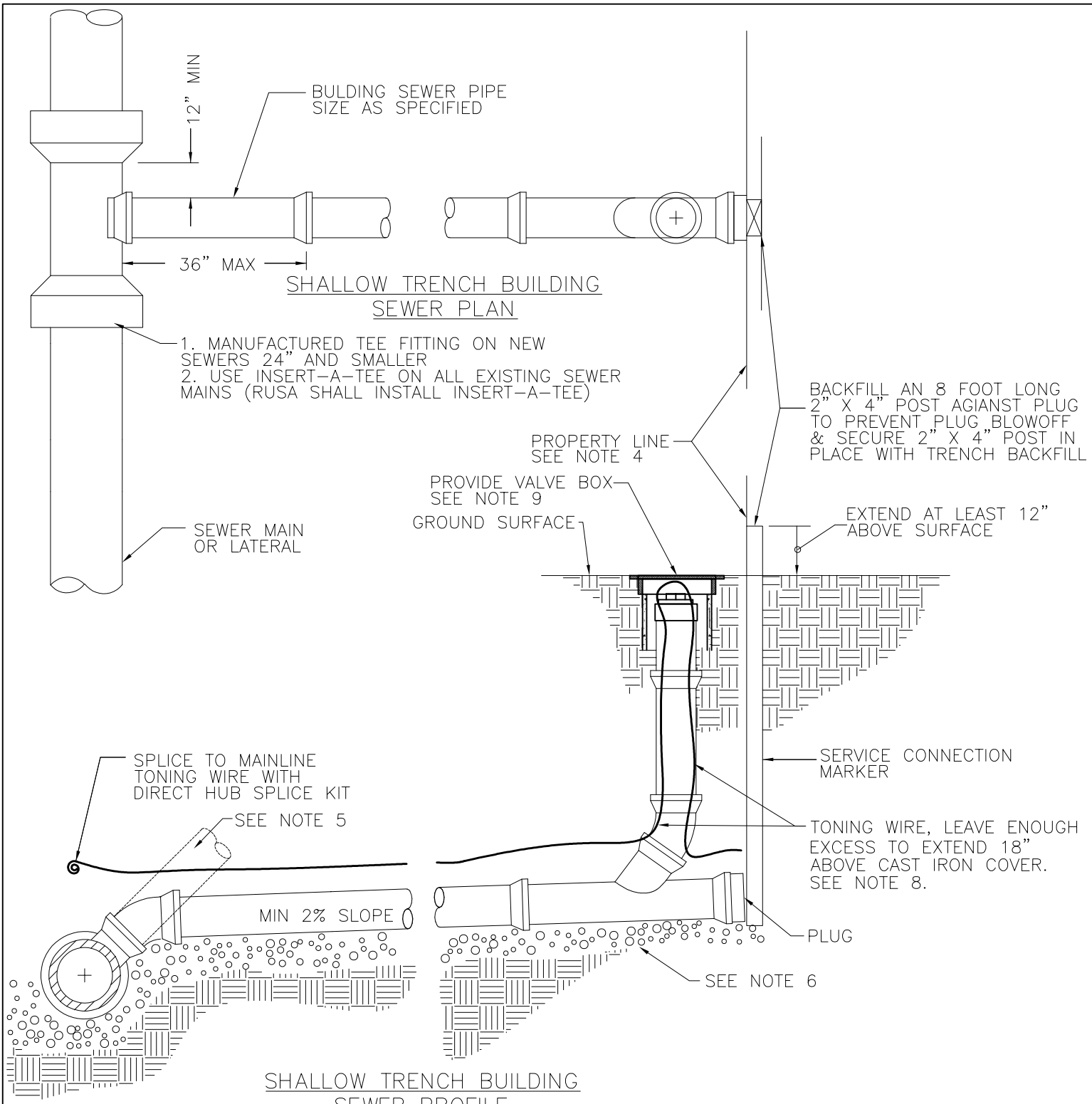

SHALLOW TRENCH BUILDING SEWER PROFILE

NOTES:

1. PIPE AND FITTINGS SHALL BE COMPATIBLE. ONLY MANUFACTURED FITTINGS SHALL BE USED.
2. TYPICAL MINIMUM DEPTH AT RIGHT OF WAY OR EASEMENT LINE SHALL BE 4'.
3. MARKER POSTS AND BLOCKING SHALL BE TREATED WOOD. POST SHALL BE AN 8 FOOT LONG 2" X 4" FIR. POST TO EXTEND 12" MIN ABOVE FINISH GRADE AND EXPOSED AREA SHALL BE PAINTED GREEN.
4. INSTALL CLEAN OUT AT OR NEAR RIGHT-OF-WAY LINE.
5. LAY BUILDING SEWER AT MAX 45° FROM HORIZONTAL TO ACHIEVE REQUIRED DEPTH AT PROPERTY LINE WHEN MINIMUM SLOPE RESULTS IN EXCESSIVE DEPTH OF OVER 4' (SEE RUSA DEEP TRENCH BLDG SEWER STD DWG 445-140).
6. FOR BEDDING AND BACKFILL SEE RUSA STD DWG 445-110.
7. MANUFACTURED TEE TO BE SET AT 45° FROM HORIZONTAL.
8. FOR TONING WIRE SPECS SEE ODOT 00445.11 PARAGRAPH E.
9. BROOKS 1-RT SEE RUSA CLEANOUT STD DWG 445-120

DRAWN	JJB
REVIEWED	RMK
APPROVED	JVB
REVISION DATE	6/19/2019
	3/13/2019
	12/18/2018

PROJECT NAME: SANITARY SEWER STANDARDS

TITLE: SHALLOW TRENCH BUILDING SEWER

ROSEBURG URBAN SANITARY AUTHORITY
1297 NE GRANDVIEW DR.
P.O. BOX 1185
ROSEBURG OR, 97470
PHONE: (541)-672-1551

SCALE: NTS

SHEET NO. 445-130

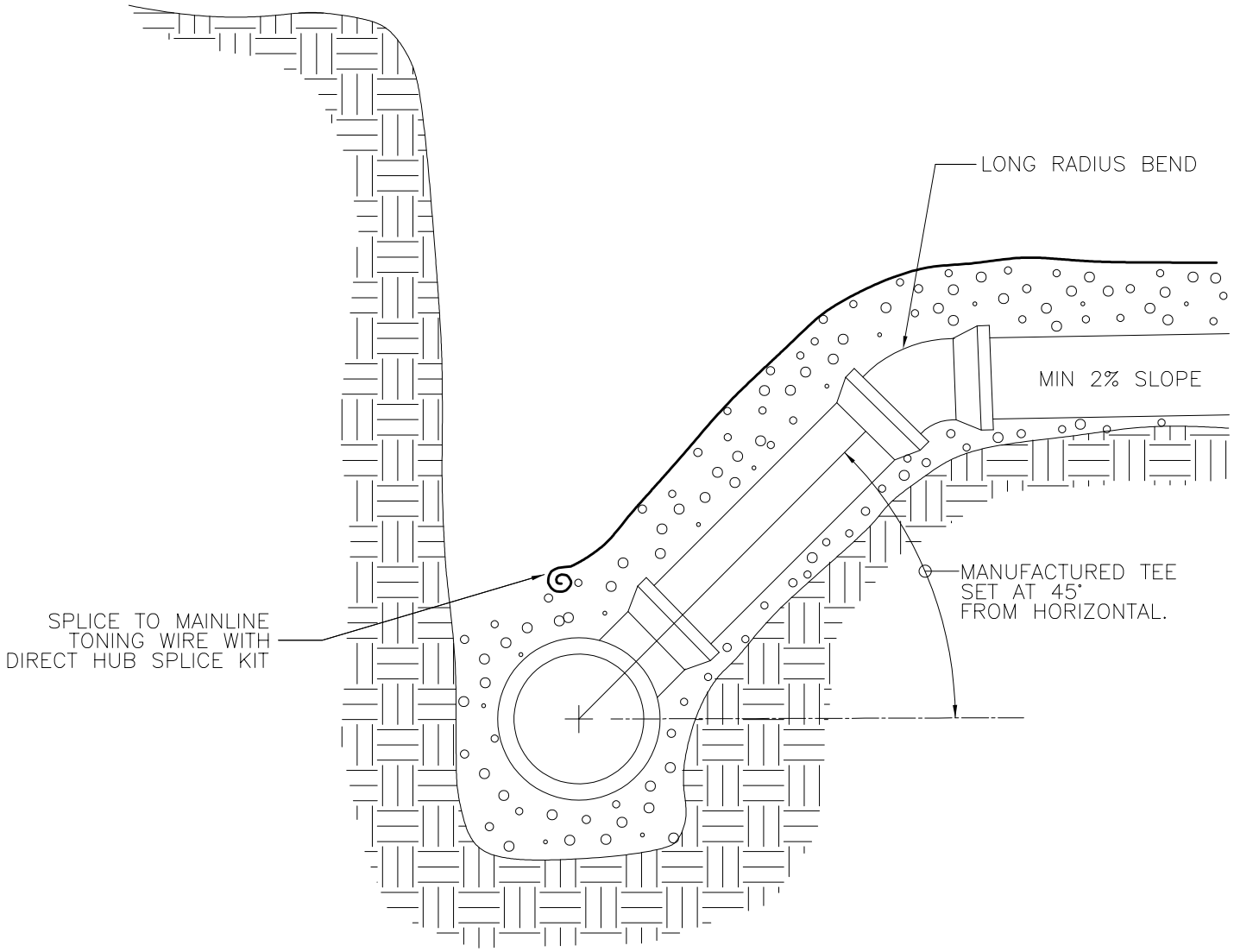

DEEP TRENCH BUILDING SEWER
(DEPTH GREATER THAN 6')

NOTES:

1. PIPE AND FITTINGS SHALL BE COMPATIBLE. ONLY MANUFACTURED FITTINGS SHALL BE USED.
2. TYPICAL MINIMUM DEPTH OF BUILDING SEWER AT RIGHT OF WAY OR EASEMENT LINE SHALL BE 4'.
3. MARKER POSTS AND BLOCKING SHALL BE TREATED WOOD. POST SHALL BE AN 8 FOOT LONG 2" X 4" FIR. POST TO EXTEND 12" MIN ABOVE FINISH GRADE AND EXPOSED AREA SHALL BE PAINTED GREEN. SEE RUSA STD DWG 445-130 FOR DETAILS.
4. INSTALL CLEAN OUT AT OR NEAR RIGHT-OF-WAY LINE. SEE RUSA STD DWG 445-130 FOR DETAILS.
5. FOR BEDDING AND BACKFILL SEE RUSA STD DWG 445-110.
6. MANUFACTURED TEE TO BE SET AT 45° FROM HORIZONTAL.
7. FOR TONING WIRE SPECIFICATIONS SEE ODOT STANDARD SPECIFICATION 00445.11 PARAGRAPH E.

DRAWN JJB	PROJECT NAME SANITARY SEWER STANDARDS	
REVIEWED RMK	TITLE DEEP TRENCH BUILDING SEWER	
APPROVED JVB		
REVISION DATE	ROSEBURG URBAN SANITARY AUTHORITY 1297 NE GRANDVIEW DR. P.O. BOX 1185 ROSEBURG OR, 97470 PHONE: (541)-672-1551	SCALE: NTS / SHEET NO. 445-140
6/19/2019		
5/24/2019		
3/13/2019		

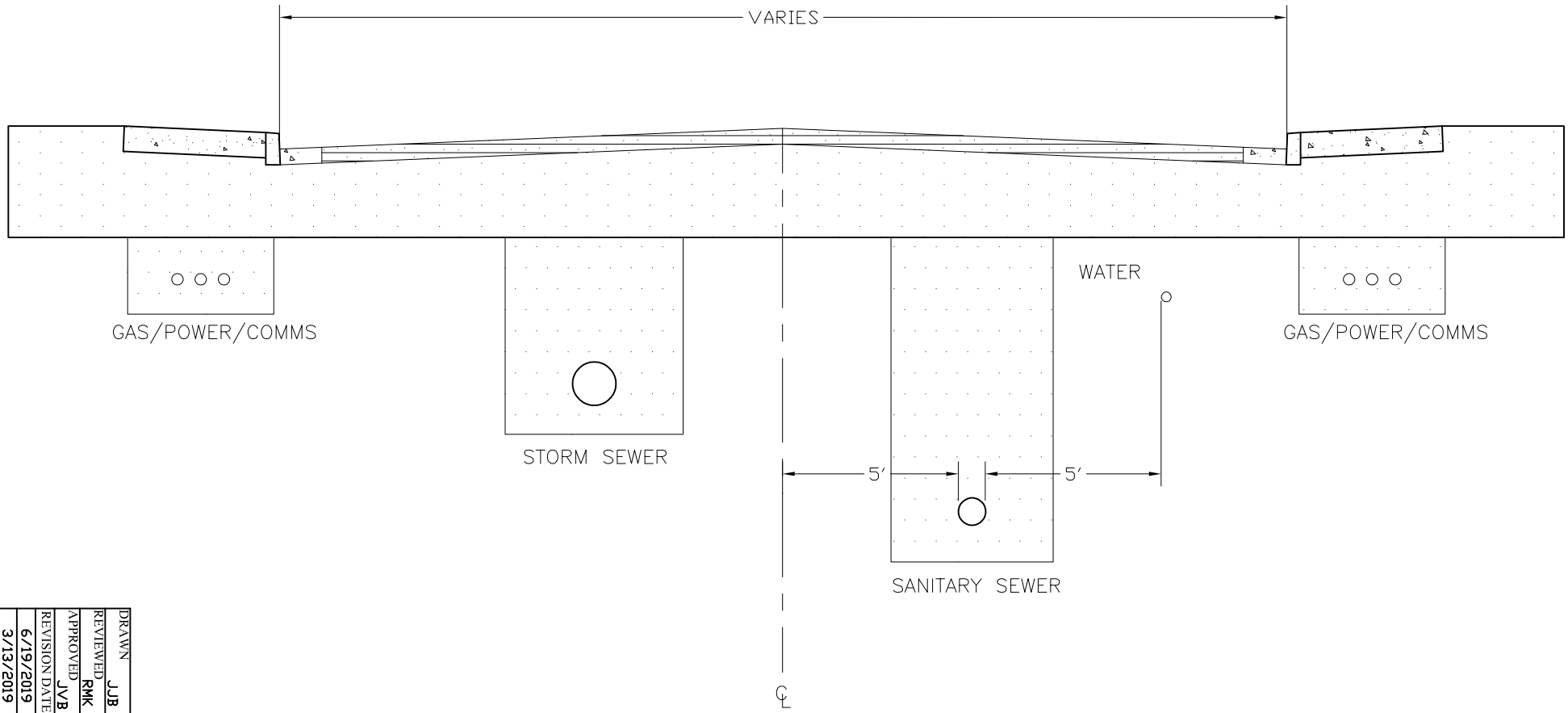

NOTES:

1. SANITARY SEWER MAIN SHALL BE 5' FROM CENTERLINE OF ROAD IN TRAVEL LANE OPPOSITE OF STORM SEWER WHEN APPLICABLE.
2. OTHER PARALLEL UTILITIES SHALL MAINTAIN A 5' LATERAL DISTANCE FROM SANITARY SEWER MAIN.

DRAWN	JJB
REVIEWED	RMK
APPROVED	JVB
REVISION DATE	
6/19/2019	
3/13/2019	
12/17/2018	

PROJECT NAME
SANITARY SEWER STANDARDS

TITLE
NEW DEVELOPMENT
SANITARY SEWER LOCATION

ROSEBURG URBAN SANITARY AUTHORITY
1297 NE GRANDVIEW DR.
P.O. BOX 1185
ROSEBURG OR, 97470
PHONE: (541)-672-1551

SCALE: NTS

SHEET NO.
445-150

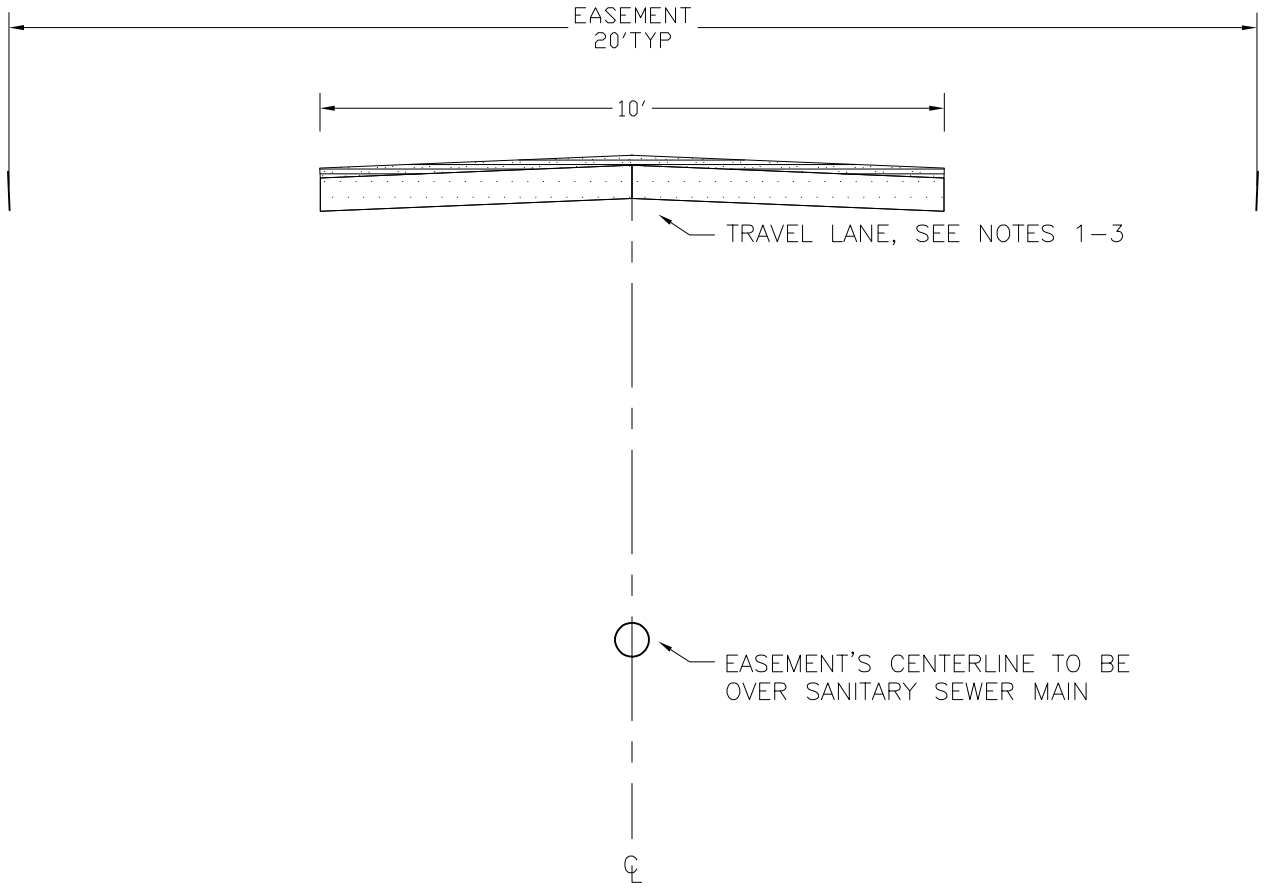

NOTES:

1. TRAVEL LANE IN EASEMENT SHALL BE A MIN OF 3" OF AC ON 12" OF AGGREGATE BASE.
2. TRAVEL LANE TO SPAN THE ENTIRE LENGTH OF EASEMENT UNLESS OTHERWISE APPROVED BY RUSA.
3. SHOULD TERRAIN PREVENT TRAVEL LANE FROM BEING IN THE CENTER OF EASEMENT, OTHER DESIGNS MAY BE SUBMITTED TO RUSA FOR APPROVAL, THE DESIGN SHOULD NOT PLACE THE TRAVEL LANE MORE THAN 3' FROM SEWER MAIN. ADDITIONAL EASEMENT WIDTH MAY BE NEEDED.

DRAWN JJB	PROJECT NAME SANITARY SEWER STANDARDS	
REVIEWED RMK	TITLE SANITARY SEWER EASEMENT	
APPROVED JVB		
REVISION DATE	ROSEBURG URBAN SANITARY AUTHORITY 1297 NE GRANDVIEW DR. P.O. BOX 1185 ROSEBURG OR, 97470 PHONE: (541)-672-1551	SCALE: NTS / SHEET NO. 445-160
6/19/2019		
6/13/2019		

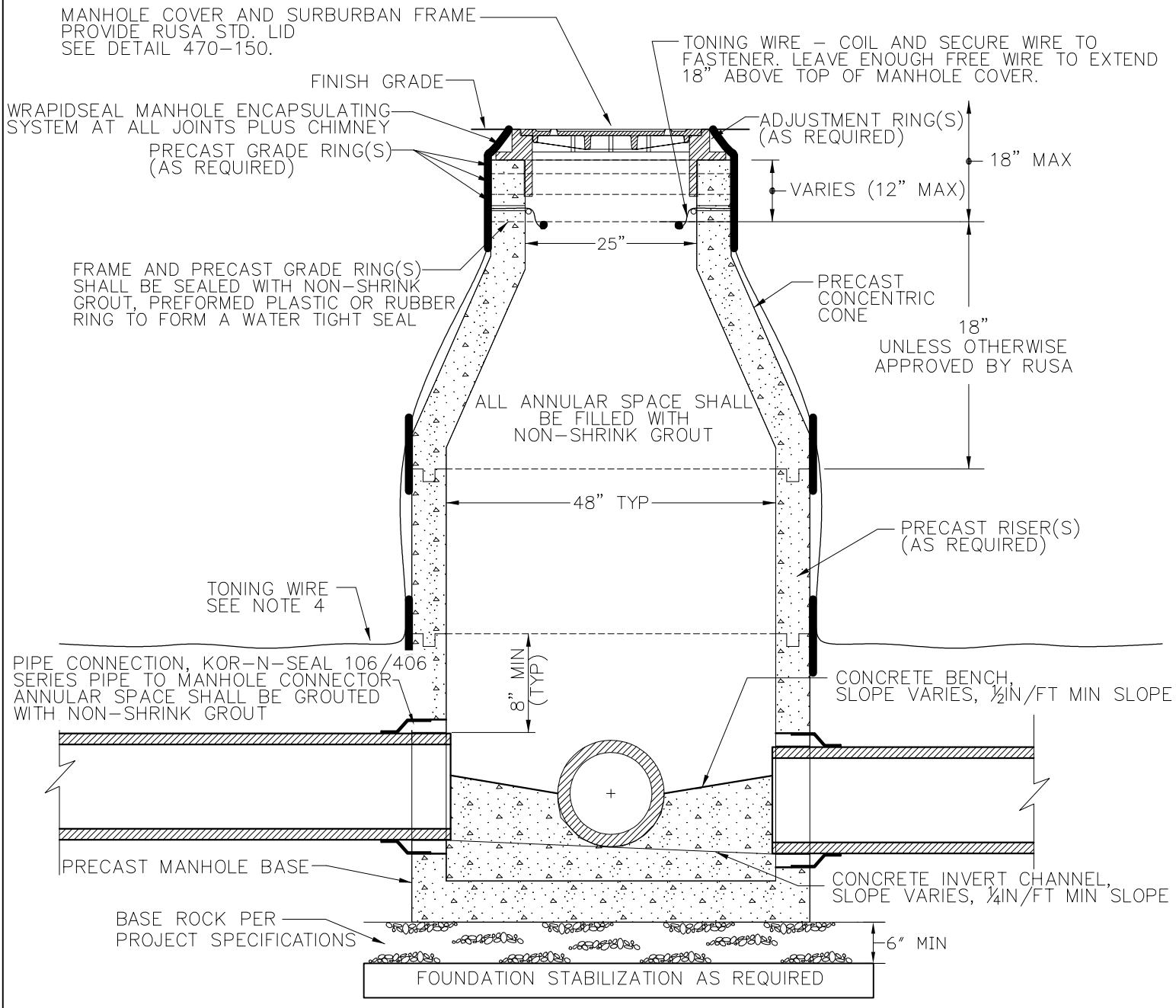

STANDARD SANITARY SEWER MANHOLE

NOTES:

1. ALL PRECAST PRODUCTS SHALL CONFORM TO REQUIREMENTS OF ASTM C478.
2. STANDARD PRECAST MANHOLE SECTION DIAMETER SHALL BE 48". OTHER DIAMETER MANHOLES ALLOWED ONLY WITH RUSA'S APPROVAL.
3. INVERT CHANNELS SHALL BE CONSTRUCTED TO PROVIDE SMOOTH SLOPES AND RADII TO OUTLET PIPE.
4. ALL CONNECTING PIPES SHALL HAVE A TONING WIRE, OR APPROVED ALTERNATE. FOR TONING WIRE SPECIFICATIONS SEE ODOT STANDARD SPECIFICATION 00445.12 PARAGRAPH E.
5. LOCATION, ELEVATION, DIAMETER, SLOPE, AND NUMBER OF PIPES VARY, SEE PROJECT PLANS.
6. ALL NEW MANHOLES SHALL BE TESTED PER ASTM C1244-11.
7. ALL BUILDING SEWERS SHALL CONNECT THROUGH KOR-N-SEALS AND BE LAID AT A MIN SLOPE OF 1/4" PER FOOT UNLESS AUTHORIZED BY RUSA TO REDUCE THAT MINIMUM TO 1/8" PER FOOT.
8. TO INSTALL A BUILDING SEWER MORE THAN 24" ABOVE THE FLOW LINE A PIPED INSIDE DROP OR PIPED OUTSIDE DROP MUST BE APPROVED, SEE RUSA STD DWG 470-130 AND 470-140.

DRAWN	JJB
REVIEWED	RMK
APPROVED	JVB
REVISION DATE	6/19/2019
	6/10/2019
	5/24/2019

PROJECT NAME: SANITARY SEWER STANDARDS

TITLE: STANDARD MANHOLE

ROSEBURG URBAN SANITARY AUTHORITY
1297 NE GRANDVIEW DR.
P.O. BOX 1185
ROSEBURG OR, 97470
PHONE: (541)-672-1551

SCALE: NTS

SHEET NO. 470-100

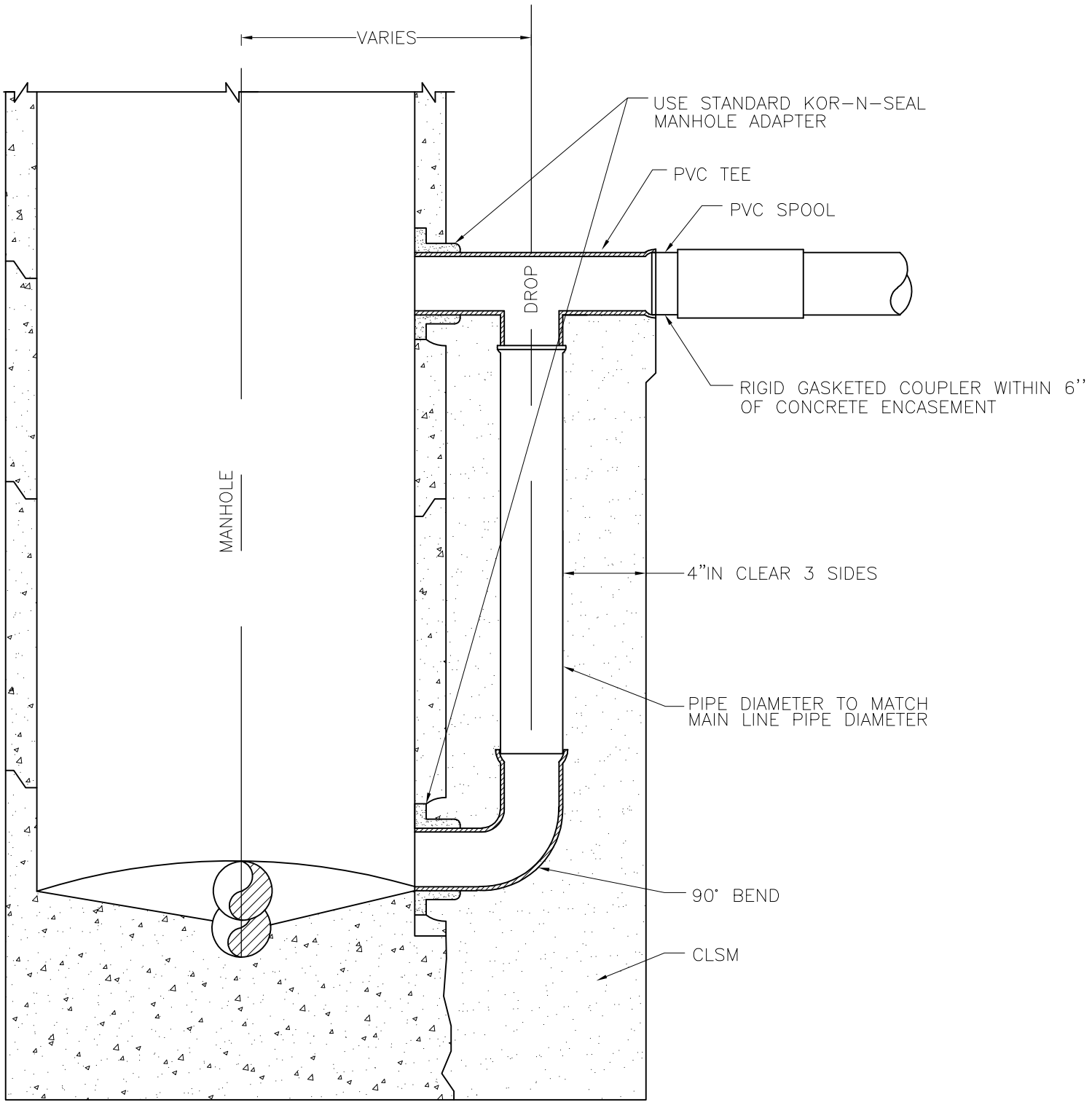

TYPICAL OUTSIDE DROP MANHOLE FOR MAINLINES AND BUILDING SEWERS

DRAWN JJB	PROJECT NAME SANITARY SEWER STANDARDS	ROSEBURG URBAN SANITARY AUTHORITY
REVIEWED RMK	TITLE OUTSIDE DROP	
APPROVED JVB	ROSEBURG URBAN SANITARY AUTHORITY 1297 NE GRANDVIEW DR. P.O. BOX 1185 ROSEBURG OR, 97470 PHONE: (541)-672-1551	
REVISION DATE 6/19/2019 5/24/2018 12/17/2018		SCALE: NTS SHEET NO. 470-110

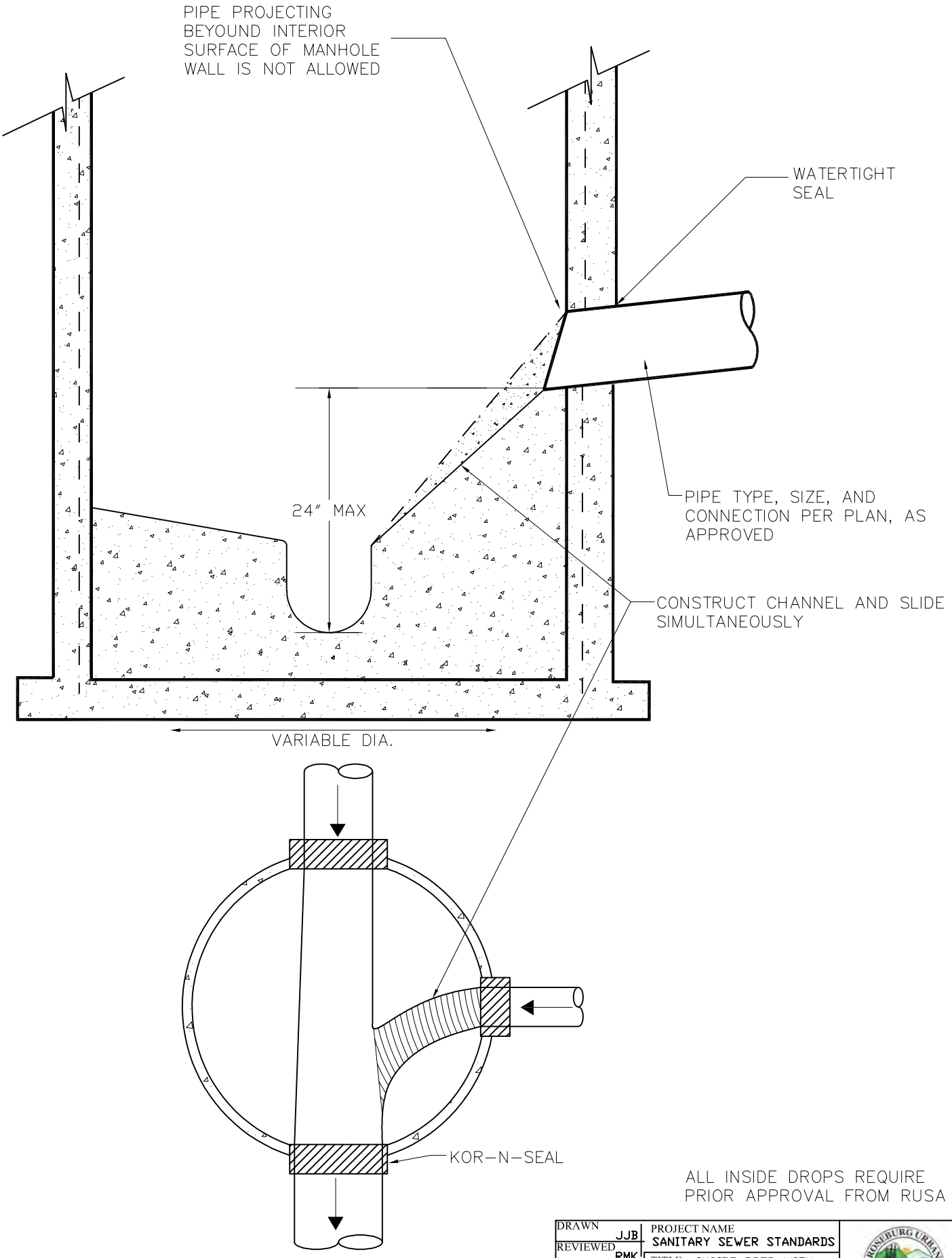

ALL INSIDE DROPS REQUIRE PRIOR APPROVAL FROM RUSA

OPEN INSIDE DROP WITH BEAVER SLIDE
(8"Ø OR GREATER)

DRAWN JJB	PROJECT NAME SANITARY SEWER STANDARDS	
REVIEWED RMK	TITLE INSIDE DROP WITH BEAVER SLIDE	
APPROVED JVB		
REVISION DATE	ROSEBURG URBAN SANITARY AUTHORITY 1297 NE GRANDVIEW DR. P.O. BOX 1185 ROSEBURG OR, 97470 PHONE: (541)-672-1551	SCALE: NTS / SHEET NO. 470-120
6/19/2019		
5/24/2019		
12/17/2018		

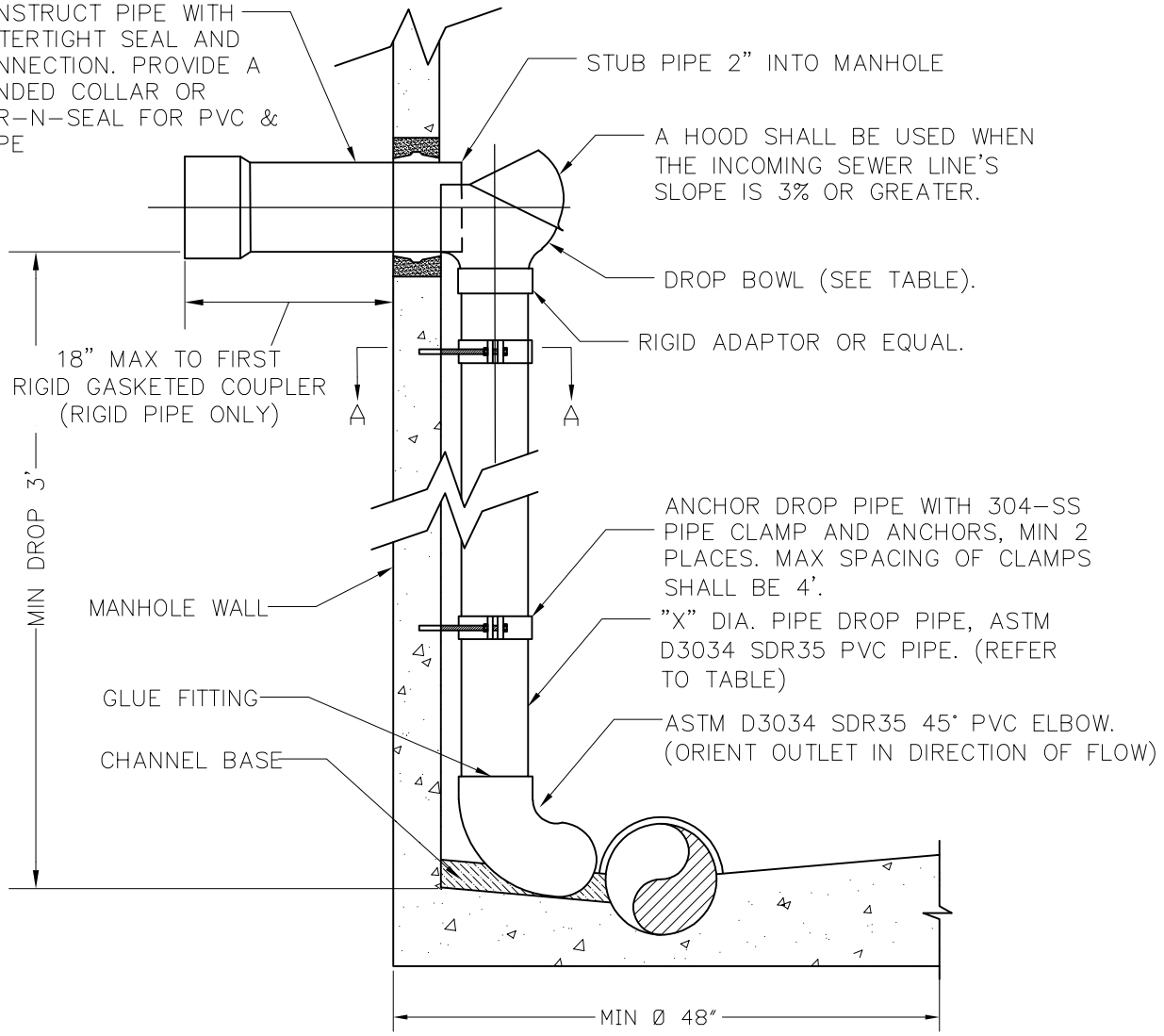

PIPED INSIDE DROP CONNECTION WITH DROP BOWL

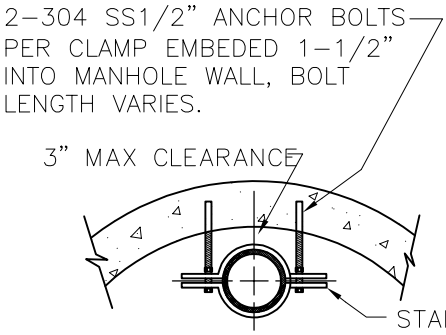

SECTION A-A
CLAMP DETAIL

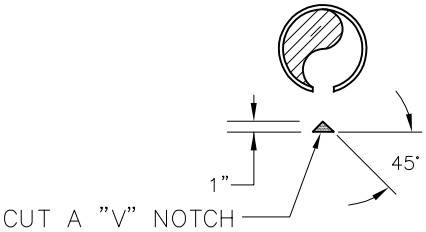

"V" NOTCH
DETAIL

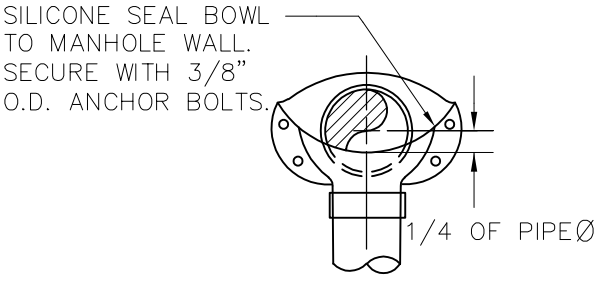

DROP BOWL W/ HOOD
DETAIL

INCOMING SEWER SIZE	DROP PIPE SIZE "X"	DROP BOWL MODEL
8" DIA.	6" DIA.	A-6
10" DIA.	8" DIA.	B-8
12" DIA.	10" DIA.	B-10

NOTES:
1. ALL INSIDE DROPS MUST HAVE RUSA'S PRIOR APPROVAL.

DRAWN JJB	PROJECT NAME SANITARY SEWER STANDARDS	
REVIEWED RMK	TITLE PIPED INSIDE DROP	
APPROVED JVB		
REVISION DATE 6/19/2019	ROSEBURG URBAN SANITARY AUTHORITY 1297 NE GRANDVIEW DR. P.O. BOX 1185 ROSEBURG OR, 97470 PHONE: (541)-672-1551	SCALE: NTS
3/13/2019		SHEET NO. 470-130
12/17/2018		

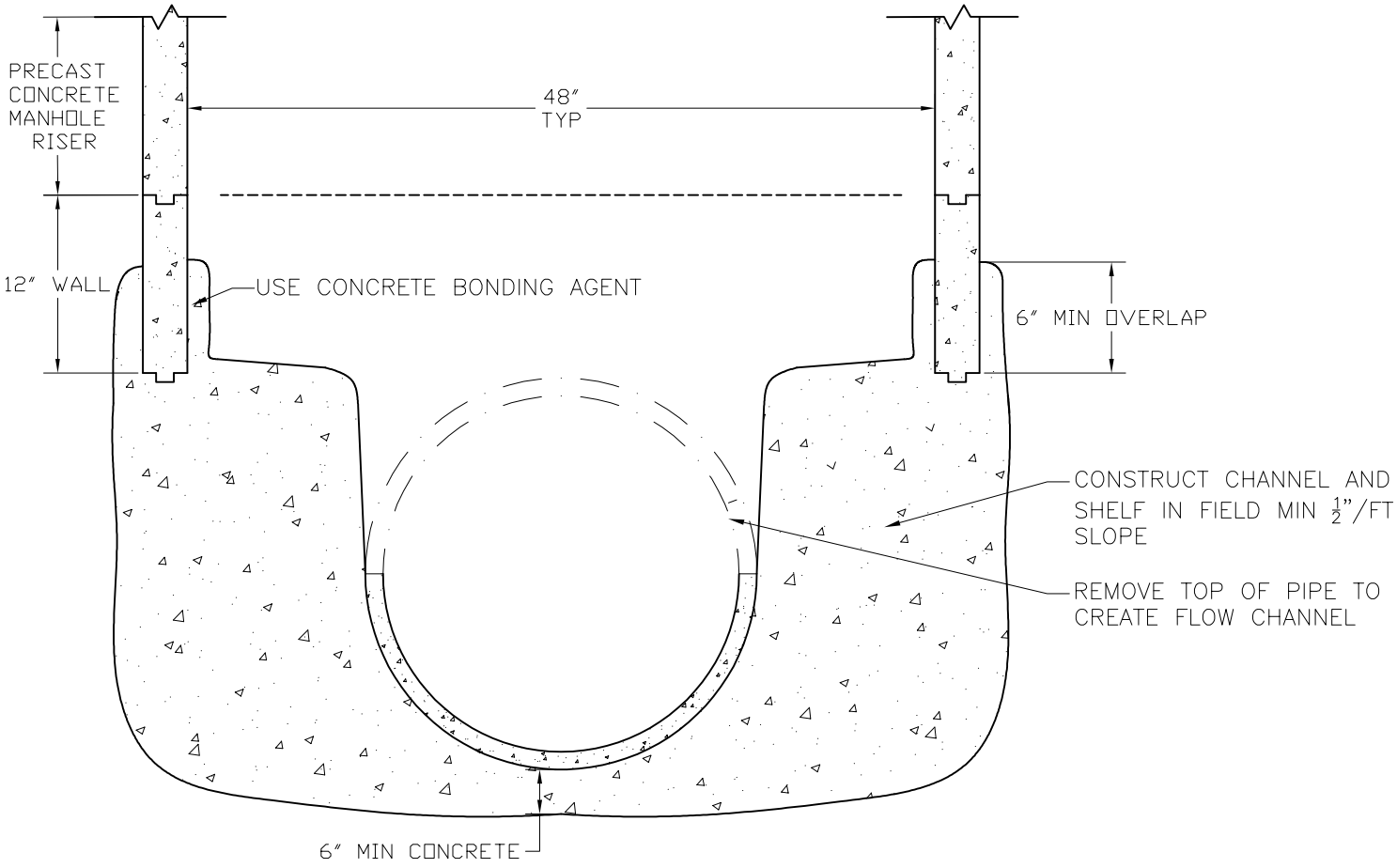

TYPICAL POUR IN PLACE MANHOLE BASE
LARGE DIAMETER CONCRETE PIPE

NOTES:

1. ALL POURED IN PLACE CONCRETE SHALL HAVE A 28 DAY STRENGTH OF 3300 PSI AND A SLUMP OF 2"–4".

DRAWN JJB	PROJECT NAME SANITARY SEWER STANDARDS	ROSEBURG URBAN SANITARY AUTHORITY
REVIEWED RMK	TITLE POUR IN PLACE MH	
APPROVED JVB		
REVISION DATE	ROSEBURG URBAN SANITARY AUTHORITY 1297 NE GRANDVIEW DR. P.O. BOX 1185 ROSEBURG OR, 97470 PHONE: (541)-672-1551	SCALE: NTS / SHEET NO. 470-140
6/19/2019		
5/24/2019		
12/17/2018		

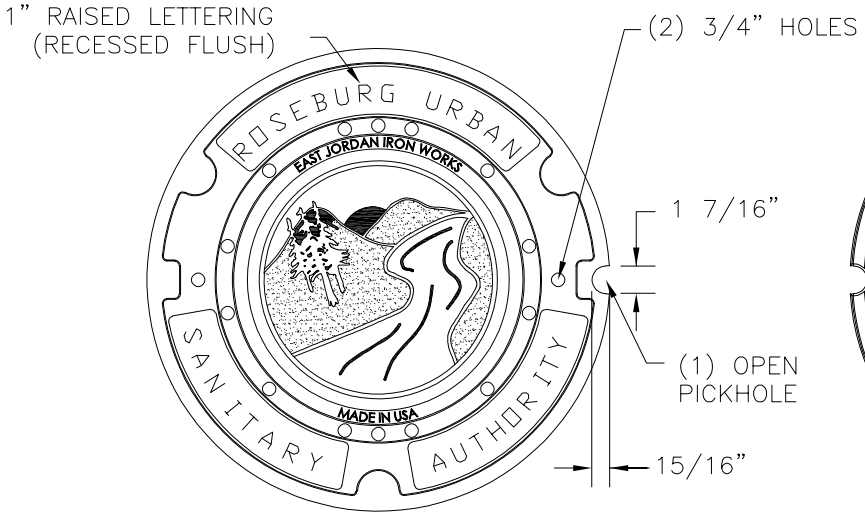

COVER FRONT

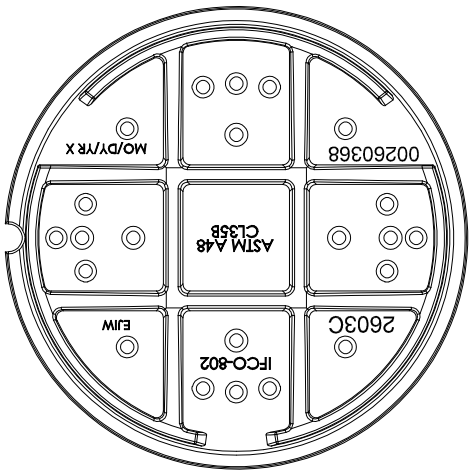

COVER BACK

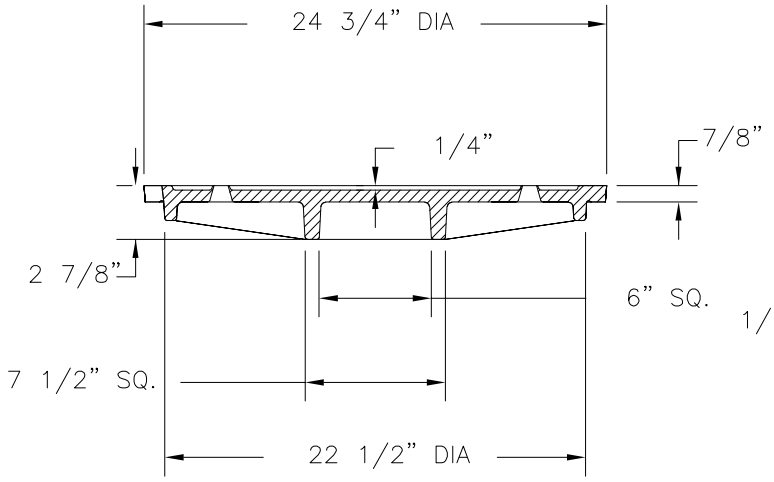

COVER SECTION

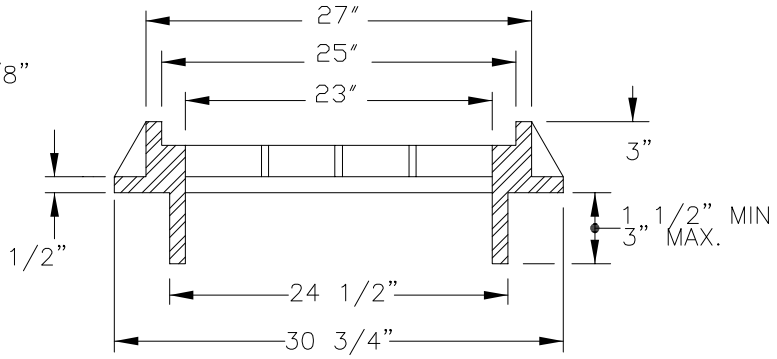

SUBURBAN STYLE FRAME

STANDARD SEWER MANHOLE COVER

APPROVED MANUFACTURERS
- EAST JORDAN IRONWORKS
  - FRAME – PRODUCT NO 260111
  - COVER – PRODUCT NO 260368
- D&L FOUNDARY
  - FRAME – PRODUCT NO A–2017–61
  - COVER – PRODUCT NO A–2017–R2

DRAWN JJB	PROJECT NAME SANITARY SEWER STANDARDS	
REVIEWED RMK	TITLE FRAME & COVER	
APPROVED JVB	ROSEBURG URBAN SANITARY AUTHORITY 1297 NE GRANDVIEW DR. P.O. BOX 1185 ROSEBURG OR, 97470 PHONE: (541)-672-1551	
REVISION DATE		
6/19/2019		
3/13/2019		
12/17/2018		
		SCALE: NTS
		SHEET NO. 470–150

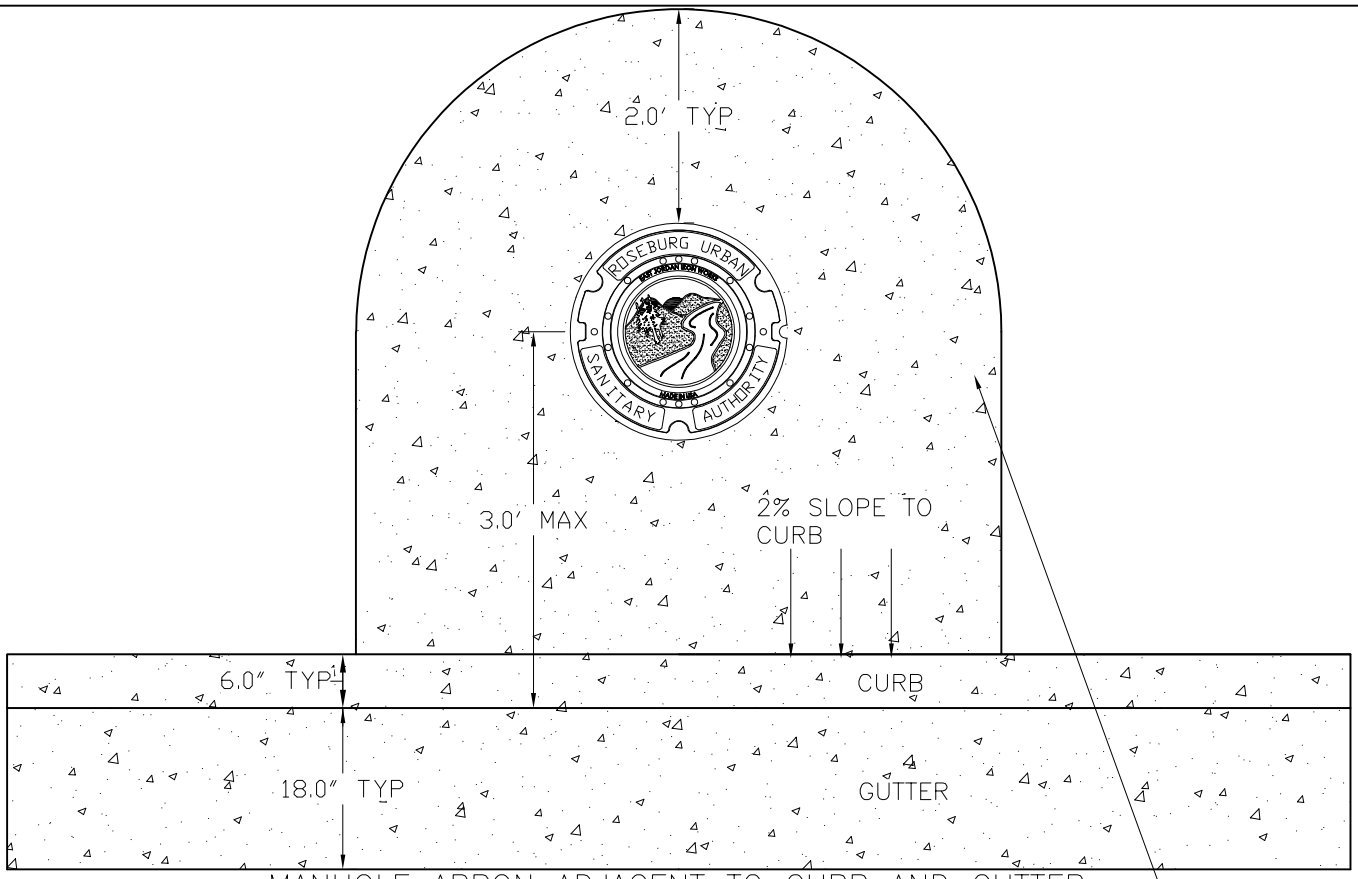

MANHOLE APRON ADJACENT TO CURB AND GUTTER

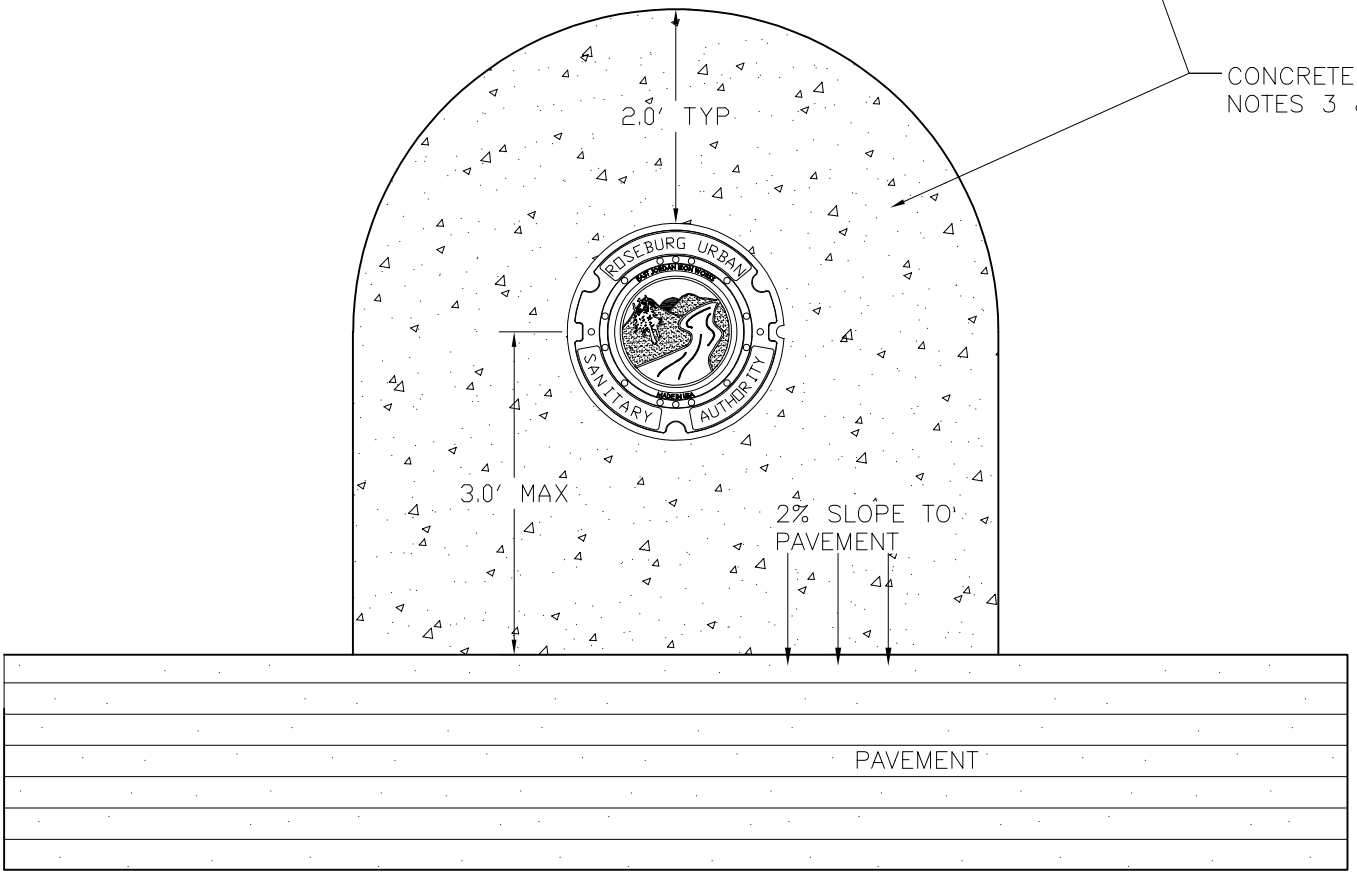

MANHOLE APRON ADJACENT TO PAVEMENT

NOTES:

1. ALL POURED IN PLACE CONCRETE SHALL HAVE A 28 DAY STRENGTH OF 3300 PSI AND A SLUMP OF 2"–4".
2. ADJACENT PAVING MATERIAL SHALL MATCH THE EXISTING OR PROPOSED PAVING.
3. CONCRETE MIN THICKNESS 6".
4. #4 REBAR TO BE PLACED 12" O.C. EACH WAY.

DRAWN	JJB
REVIEWED	RMK
APPROVED	JVB
REVISION DATE	6/19/2019
	5/30/2019
	3/13/2019

PROJECT NAME: SANITARY SEWER STANDARDS

TITLE: MANHOLE APRON

ROSEBURG URBAN SANITARY AUTHORITY
1297 NE GRANDVIEW DR.
P.O. BOX 1185
ROSEBURG OR, 97470
PHONE: (541)-672-1551

SCALE: NTS

SHEET NO. 470-160

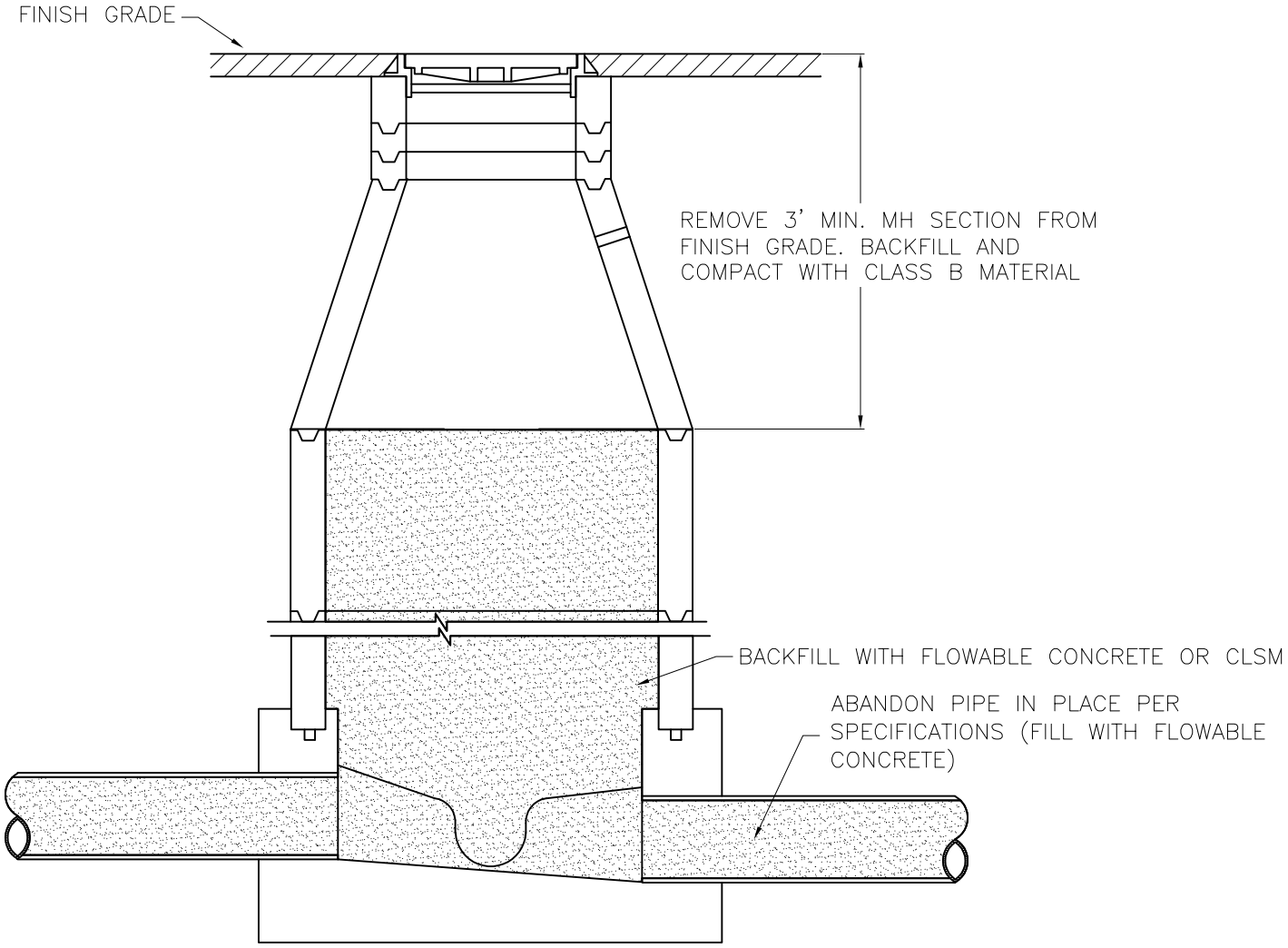

TYPICAL MANHOLE (ABANDONED)

(OPTION: REMOVE MANHOLE AND BACKFILL/COMPACT WITH CLASS B MATERIAL)

DRAWN JJB	PROJECT NAME SANITARY SEWER STANDARDS	
REVIEWED RMK	TITLE ABANDONED MANHOLE	
APPROVED JVB	ROSEBURG URBAN SANITARY AUTHORITY 1297 NE GRANDVIEW DR. P.O. BOX 1185 ROSEBURG OR, 97470 PHONE: (541)-672-1551	
REVISION DATE		
6/19/2019		
12/17/2018		SCALE: NTS / SHEET NO. 490-100
12/14/2018		

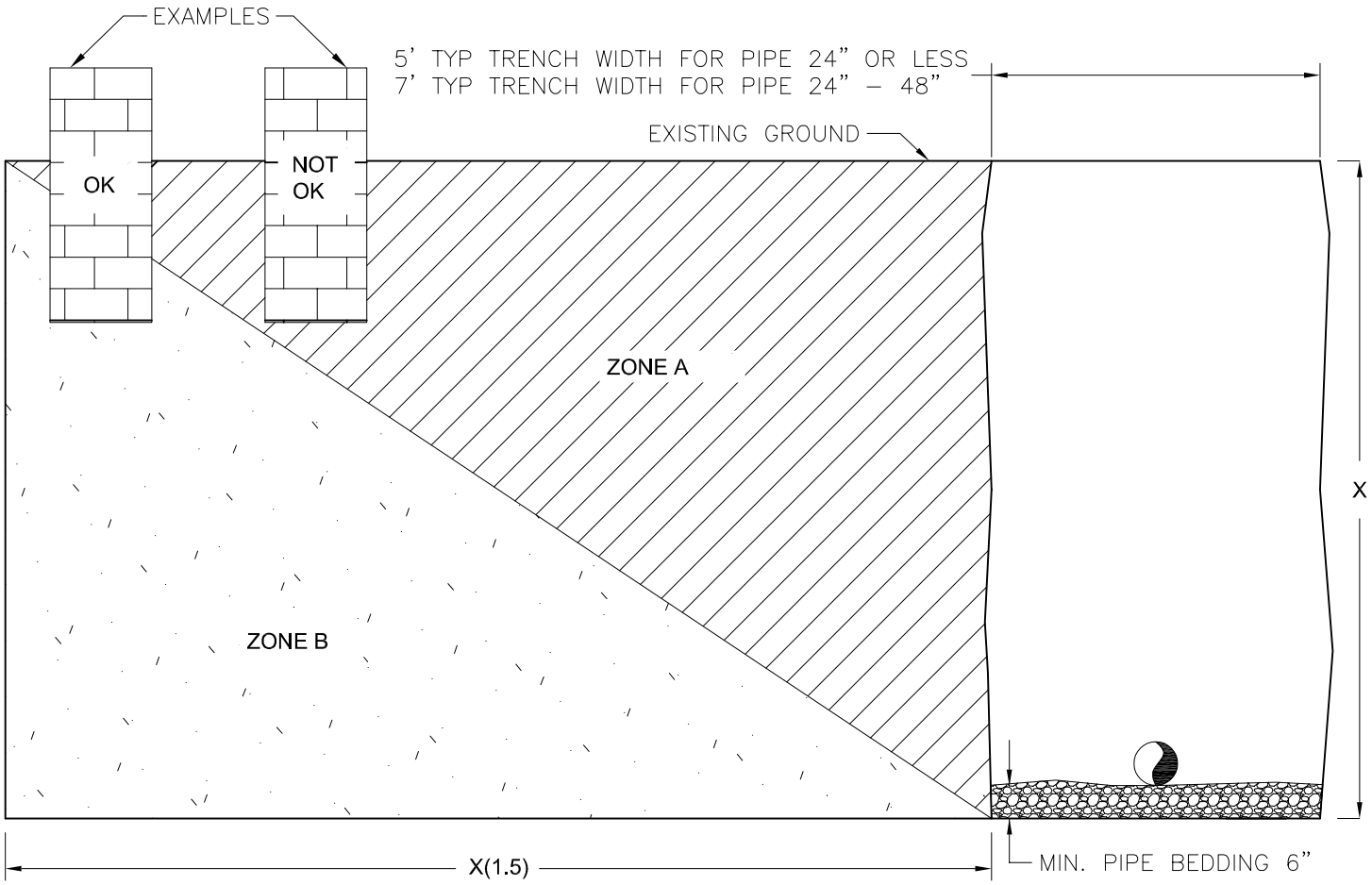

SEWER PROXIMITY BUILDING DETAIL

NOTES:

1. NO CONSTRUCTION WILL BE PERMITTED WHERE THE WEIGHT OF THE NEW CONSTRUCTION'S LOAD BEARS IN ZONE "A" WITHOUT AN APPROVED ENGINEER'S SUBMITTIAL TO ROSEBURG URBAN SANITARY AUTHORITY.
2. PIPE DIAMETER AND DEPTH (X) CAN BE OBTAINED FROM ROSEBURG URBAN SANITARY AUTHORITY.

DRAWN JJB	PROJECT NAME SANITARY SEWER STANDARDS	
REVIEWED RMK	TITLE SEWER PROXIMITY BUILDING DETAIL	
APPROVED JVB		
REVISION DATE	ROSEBURG URBAN SANITARY AUTHORITY 1297 NE GRANDVIEW DR. P.O. BOX 1185 ROSEBURG OR, 97470 PHONE: (541)-672-1551	SCALE: NTS / SHEET NO. 490-110
6/19/2019		
12/17/2018		
12/14/2018		

PROPERTY ENTRY RELEASE AND INDEMNITY AGREEMENT

This Property Entry Release ("Release") is made for the benefit of _<name of property owner>_____ ("Owner"), and by _____<contractor>_____ ("Entrant").

Entrant desires to enter onto the Owner's property located at Tax Lot ########, (the "Site"), for the purpose of _____ (the "Work") from _January 1st, 2020_ to June 30th, 2021. The Owner will be notified a minimum of 24 hours prior to the Entrant entering the Site.

The Owner has determined to allow Entrant to enter onto the property for the Work in consideration of the execution and delivery of this Release by the Entrant.

In consideration of the foregoing promises herein contained and other good and valuable consideration, the receipt and sufficiency of which is hereby acknowledged, Entrant agrees as follows:

1. **Release**. Entrant, on behalf of himself, his heirs, executors, administrators and assigns, hereby irrevocably and unconditionally releases, acquits, and forever discharges the Owner and all persons who are now or in the past have been officers, agents, or employees, from any and all charges, complaints, claims, liabilities, obligations, promises, agreements, damages, causes of action, suits, rights, demands, costs, losses, debts, and expenses of any nature whatsoever, known or unknown, liquidated or unliquidated, fixed or contingent, direct or indirect, which Entrant now has or holds or claims to have or hold or which he at any time heretofore had or held, or claimed to have or hold, or which he at any time hereafter may have or hold, or claims to have or hold, against the Owner

2. **Voluntary and Knowing Release**. Entrant represents and agrees that he is fully aware of his right to discuss any and all aspects of this matter with an attorney and that he has carefully read and fully understands all the provisions of this Release and that he is voluntarily entering into this Release and has not been coerced or influenced by any person acting on behalf of any other party.

3. **Environmental Contamination**.

a) Entrant shall not release, discharge, leak, emit or permit to be released, discharged, leaked, or emitted, any material into the atmosphere, ground sewer system or water, on, adjacent to, or under the Site, that does or may adversely affect the health, welfare, or safety of persons, whether located on the Site or elsewhere; and

(b) Should environmental contamination occur on the Site, or on any property adjacent to the Site, directly or indirectly on account of Entrant's use thereof, Entrant will be solely responsible for and will defend, indemnify, and hold Owner, its agents, and employees harmless from and against any and all direct claims, costs and liabilities, including attorneys' fees and costs, arising out of or in connection with the cleanup or restoration of the Site. As used herein, the term "hazardous materials" means asbestos or any hazardous substance, waste, or materials as defined in any federal, state, local environmental or safety laws or regulation including, but not limited to, CERCLA.

(c) The obligations of this Section 3 shall survive the expiration or termination of this Release.

4. **Owner Direction**. Entrant agrees to follow the direction of the Owner with regard to entry onto the Site and to remove from the Site upon request by the Owner.

5. **No Modifications**. This Release shall not be altered, amended, or modified in any respect except by a writing duly executed by all the parties hereto.

6. **Good Faith**. Entrant agrees that he has been dealt with fairly and in good faith in all respects with regard to this Release.

7. **Covenant Not to Sue**. Entrant further agrees and covenants that neither he nor any person, organization, or other entity on his behalf, has nor will file a charge, claim, sue, or cause or permit to be filed, charged, or claimed any

action for legal or equitable relief (including damages, injunctive, declaratory, monetary relief, or other) involving any matter occurring at any time or related in any way whatsoever to his entry onto the Site or otherwise relating to or involving the Owner or any information about the Owner known by, or which becomes known by, Entrant.

8. **Indemnification**. Entrant hereby agrees to indemnify, defend, and hold harmless the Owner from and against any and all loss, cost, damages, or expenses, including, without limitation, attorneys' fees incurred by the Owner that arises from Entrant's Work or other use of the Site. Entrant shall procure and maintain a General Liability Insurance Policy (the "Policy"), that shall be in the amount of One Million Dollars per occurrence, and name the Owner as an insured party. The Policy must also contain provisions providing that such insurance is primary insurance between the Parties to this Release, with any other insurance maintained by the Owner being in excess of, and noncontributing with, the Policy that Entrant maintains. Entrant shall provide a certificate of insurance upon request by the Owner, and provide the Owner with not less than sixty (60) days prior notice of any cancellation, or material change to the Policy.

9. **Severability**. In the event that any of the provisions, or any portion of any provision, of this Release are found to be invalid or unenforceable, such unenforceable provision(s) shall be deemed severed from the remainder of the Release and shall not cause the invalidity or unenforceability of the remainder of the Release or the remainder of any provision from which any portion has been severed pursuant to this paragraph. If such provision is deemed invalid due to its scope or breadth, such provision shall be deemed valid to the extent of the scope or breadth permitted by law.

10. **Injunctive Relief**. Entrant agrees that it would be difficult to compensate the Owner fully for damages for any violation of the provisions of this Release. Accordingly, Entrant specifically agrees that the Owner shall be entitled to temporary and permanent injunctive relief to enforce the provisions of this Release and that such relief may be granted upon request by the Owner without bond. This provision with respect to injunctive relief shall not, however, diminish the right of the Owner to claim and recover damages in addition to injunctive relief.

11. **Law and Licenses**. Entrant affirms and warrants that Entrant will abide by all local, state and federal laws, rules or regulations in the performance of this Release. Entrant affirms and warrants that Entrant has, and will maintain, any and all licenses or certifications required by the above.

12. **Attorney's Fees.** The prevailing party shall have the right to collect from the other party its reasonable costs and necessary disbursements and attorneys' fees incurred in enforcing this Release.

13. **No Third Party Beneficiary Rights**. This Release is not intended to, nor shall it be construed to give any Person (other than the parties to this Release) any interest or rights (including, without limitation, any third party beneficiary rights) with respect to or in connection with any agreement or provision contained herein or contemplated hereby.

PLEASE READ CAREFULLY. THIS GENERAL RELEASE INCLUDES PROVISIONS WHEREBY ENTRANT SPECIFICALLY AND KNOWINGLY ASSUMES THE RISK OF AND PERSONAL LIABILITY FOR ENTRY ONTO THE SITE AND FOR ANY INJURY OR HARM THAT MAY RESULT THEREFROM, AS WELL AS A RELEASE OF ALL KNOWN AND UNKNOWN CLAIMS.

ACCEPTED AND AGREED:

ENTRANT:	**Property Owner:**
Signed: _____	Signed: _____
Date: _____	Date: _____

PINNACLE
ENGINEERING, INC.
GEOTECHNICAL · STRUCTURAL · CIVIL
QUALITY DESIGNS - ENGINEERED TO LAST

22 April 2020

Roseburg Urban Sanitary Authority
1297 NE Grandview Drive
Roseburg, OR 97470

Attn: Ryon Kershner

Re: Hooker Road Sewer Project
Subsurface Exploration – Hooker Road from General Avenue beyond Oak Tree Road
Project # 30189.03

Dear Mr. Kershner,

A. Scope

At your request, representatives of Pinnacle Engineering, Inc. (PEI) conducted a record search, and then visited the above referenced site to verify the existing subsurface conditions to a depths ranging between 7.5 and 10 feet below ground surface (BGS). The purpose of our exploration was to determine the soil conditions at the site for the depths of the proposed sewer invert elevation for the proposed sewer line.

The PEI test boring (TB) logs are presented in the attachments hereto. Results of laboratory testing are presented in Section D of this report.

B. Prior Geotechnical Report

During our investigation, PEI conducted a records search and review of geotechnical reports for nearby past projects. PEI has prepared several geotechnical reports for projects near the subject site. There are no reports that exist at this site for that fit the scope of this project.

C. Field Exploration

C.1. Surface Reconnaissance

Contemporaneous with the geotechnical site characterization, a surface reconnaissance was conducted.

The surface reconnaissance concluded that there were no other observable site defects that would compromise viability of the site for the planned construction techniques.

C.2. Surface Hydrology

The surface layer of SILT and shallow rock materials are relatively impermeable and, therefore, retard percolation of surface water. Although retarded, the surface water typically penetrates through fractures in the rock, which results in retention of much of the seepage close to the surface.

C.3. Geotechnical Characterization

Soil descriptions and layer interfaces are interpreted from observations on site. While the layers are shown as having distinct boundaries in field logs, in reality, the change is gradual.

Site soils consist of a structural paving section approximately 24 inches thick that is comprised of a thin asphaltic concrete pavement section crushed aggregate base course overlying the natural site soil.. Underlying the structural pavement section, the natural site soil consists of a thick high plasticity CLAY overlying a low plasticity SILT that transitions to SHALE at depths ranging between 5 and 10 feet.

The site soils can be excavated with light to moderate effort by moderate energy excavation equipment. Shallow trenches may be expected to stand for short periods of time without significant sloughing. Where seepage is present and during wet weather, potential for sloughing is increased.

C.4. Groundwater

Seepage / free water was contacted at 3 feet BGS (TB1) and 4 feet BGS (TB2). Groundwater was not encountered at TB3 and TB4. This level was reduced and not present at either bore hole following the exploration and backfilling of the hole.

It is likely that the phreatic surface will fluctuate both seasonally and during the typical five year hydrologic cycle. Considering annual precipitation records during the past several years, the absence of measurable changes in the ground water surface should not be regarded as evidence that higher groundwater conditions will not occur in the future. Experience indicates that the phreatic surface will vary seasonally by approximately five feet and will vary by approximately ten feet between hydrologic extremes, an average ten year period. We project that the average high groundwater elevation will be less than 5 feet below the surface. Seepage, occasionally in considerable amounts, should be expected at the transitional zone between the residual soils and the underlying transitional bedrock.

C.5. Field Exploration

Field investigations were conducted on the 6th of April 2020, and included a geologic reconnaissance of the site and immediate surrounding area, and observation, underlying soils encountered in four test borings.

Test borings were advanced to the desired depth or practical refusal using a Little Beaver drill mounted on an all-terrain vehicle, which advanced 6 inch diameter continuous flight hollow stem auger at the locations and depths depicted on Figure 2. The test borings extended to depths ranging from 5 to 10 feet below ground surface. Soil samples were obtained using a split spoon sampler advanced by the Standard Penetration Test Method, which also provides an accurate measure of soil density. The Standard Penetration Test measures the resistance to penetration of a 2" diameter sampler driven by a 30" drop of a 140 pound hammer and provides a disturbed, but representative sample suitable for classification and other testing. Samples were sealed and stored for laboratory testing.

In addition to basic field soil classification tests, *in situ* field density tests were conducted on site soils.

D. Findings and Conclusions

D.1. Geotechnical Conditions

Subsurface conditions at test borings are presented in the drill logs. Material properties are similar for each similar classification throughout the project, with the primary difference being layer thicknesses.

D.2. Subsurface Conditions

Summarily, underlying the existing structural paving section, a layer of high plasticity CLAY approximately 4 feet thick overlies a layer of low plasticity clayey SILT containing a minor sand component. Underlying the low plasticity clayey SILT, the site begins to transition to SHALE. Depth of SHALE cannot accurately be determined due to our limited depth of exploration; however, it is estimated to be present at depths ranging from 5 to 10 feet BGS.

MATERIAL PROPERTIES

Material	Ultimate Unconfined Compressive Strength (TSF)	Angle of Internal Friction (degrees)
Medium Brown High Plasticity CLAY	0.75	20
Dense clayey SILT	0.88	30
SAND	0	35
Dense Gravel	0	50
Formational Material	2	16

D.3. Conclusions

General Street to Oak Tree Road and Beyond – Subsurface conditions at the locations of TB1 and TB2 exhibited ground water at locations of 3 feet and 4 feet, respectively. Depending on when construction occurs, dewatering of the trench may be required. Well points should prove effective, but care should be exercised to avoid aggressively lowering the phreatic surface in the vicinity of surrounding structures, as the increase in effective stress could result in excessive consolidation and settlement of nearby structures.

At the location of TB 3, competent weathered formational material was encountered at a shallower depth than other holes. Depth to weathered SHALE at this location was 5 feet BGS. It is estimated that this hole can be excavated with moderate to heavy excavation equipment. Ripping of the top 2 to 3 feet of shale may be required at this location.

E. Trenching and Piping

Additional underground piping will be constructed. Excavation can be accomplished by normal means above the competent rock layer. Depending on when construction occurs, dewatering of the trench may be necessary to facilitate construction. A small amount of excavation for new piping will likely extend 3 feet below the weathered rock layer, as shown in the drill logs in Appendix A, attached.

Pipe installation and backfill should comply with project construction drawings.

F. Limitations of Report

The analyses, conclusions and recommendations presented in this report are based on site conditions as they existed at the time of the study, and assume that soils and groundwater conditions encountered, observed or inferred during our exploration are representative of soils and groundwater conditions throughout the site. If, during construction, subsurface conditions are found to be different or design parameters change, we should be advised at once so that we can review this report and reconsider our recommendations, as appropriate. If there is a significant lapse of time between submission of this report and the start of work at the site, if the project is changed, or if site conditions have changed, we recommend that this report be reviewed to verify continued applicability.

This report was prepared for the use of the owner and design team for the subject project. It is only to be used for this site and construction project. No third party beneficiaries are intended. It should be made available to contractors for information and factual data only, such as test boring logs, measured water levels, samples, sample classifications and laboratory test results. The report is interpretive in nature and shall not be used for contractual purposes, such as warranting that subsurface conditions will be consistent with or as indicated by the boring or test pit logs and subsurface profiles contained or inferred herein and/or discussions of subsurface conditions. It is not to be used for extensions of this project or for other projects without our express written consent. We should be contacted to review both plans and specifications for compatibility with this report before finalization. Construction Materials Engineering and Testing (CoMET) services, compaction testing and periodic observation during construction are recommended.

We have performed these services in conformance with generally accepted engineering and geotechnical engineering practices in southern Oregon at the time the study was conducted. No other warranty is either expressed or implied.

Since test pits and borings represent only the conditions at those discrete locations, unanticipated soil conditions may be and, in fact, are commonly encountered on projects of similar size. Unanticipated conditions cannot be precluded by practical field studies. Since such unexpected conditions frequently necessitate budget increases to attain a properly constructed project, we recommend that a reasonable contingency account be established sufficient to fund possible extra costs.

We appreciate the opportunity to assist you with your project. If we may be of further assistance, please do not hesitate to contact us.

Sincerely,

Pinnacle Engineering, Inc.

Matt Keller, PE, CSI
Project Engineer
President

Encl;

EXPIRES: 06/30/2021

FIGURES

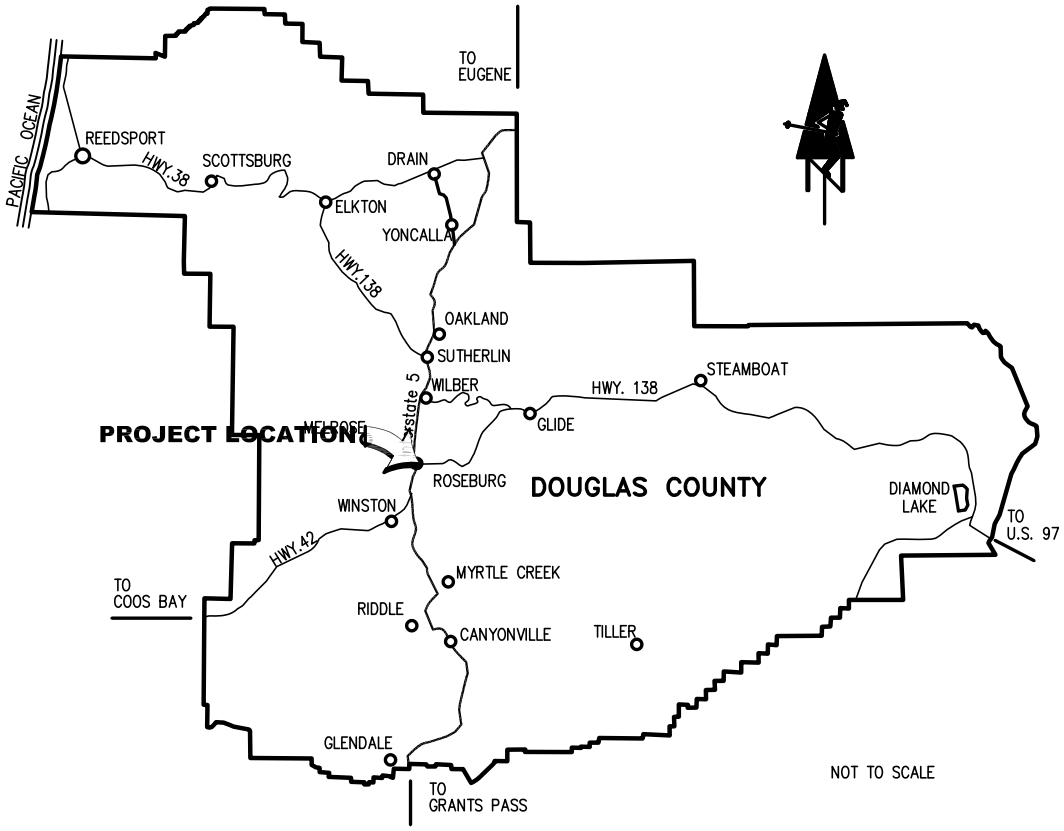

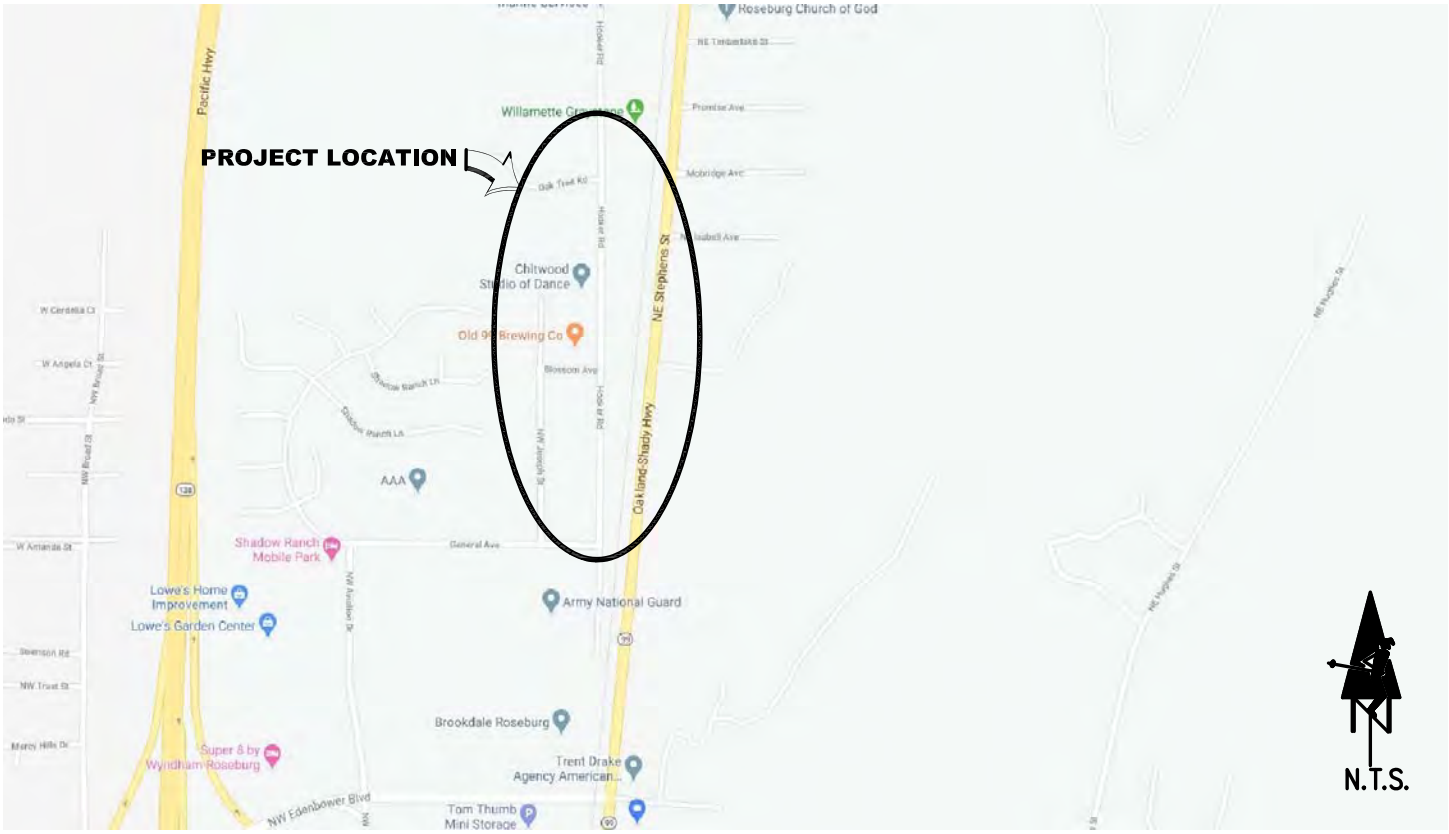

PINNACLE
ENGINEERING, INC.
3329 NE STEPHENS ROSEBURG, OREGON 97470
PH:541-440-4871 FAX:541-672-0677
www.pinnacleengineering.com

SUBSURFACE SOILS INVESTIGATION VICINITY MAP

PROJECT: 30189.03 - HOOKER ROAD SEWER PROJECT

CLIENT: ROSEBURG URBAN SANITARY AUTHORITY

FIG. 1

PINNACLE
ENGINEERING, INC.
3329 NE STEPHENS ROSEBURG, OREGON 97470
PH:541-440-4871 FAX:541-672-0677
www.pinnacleengineering.com

SUBSURFACE SOILS INVESTIGATION SITE MAP

PROJECT: 30189.03 - HOOKER ROAD SEWER PROJECT

CLIENT: ROSEBURG URBAN SANITARY AUTHORITY

FIG. 2

SOIL TYPES (Ref. 1)

Boulders:	Particles of rock that will not pass a 12 inch screen.
Cobbles:	Particles of rock that will pass a 12 inch screen, but not a 3 inch sieve.
Gravel:	Particles of rock that will pass a 3 inch sieve, but a #4 sieve.
Sand:	Particles of rock that will pass a #4 sieve, but not a #200 sieve.
Silt:	Soil that will pass a #200 sieve, that is non-plastic or very slightly plastic, and exhibits little pr no strength when dry.
Clay:	Soil that will pass a #200 sieve, that can be made to exhibit plasticity within a range of water contents, and that exhibits considerable strength when dry.

MOISTURE AND DENSITY

Moisture condition:	An observational term; moist, wet.
Moisture content:	The weight of water in a sample divided by the weight of dry soil in the sample, expressed as a percentage.
Dry Density:	The pounds of dry soil in a cubic foot of soil

DESCRIPTORS OF CONSISTENCY (Ref. 3)

Liquid Limit:	The water content at which a - #200 soil is on the boundary between exhibiting liquid and plastic characteristics. The consistency feels like soft butter.
Plastic Limits:	The water content at which a - #200 soil is on the boundary between exhibiting plastic and semi-solid characteristics. The consistency feels like stiff putty.
Plasticity Index:	The difference between the liquid limit and the plastic limit, i.e. the range in water contents over which the soil is in a plastic state.

MEASURES OF CONSISTENCY OF COHESIVE SOILS (CLAYS) (Ref's 2&3)

Very soft	N=0-1*	C=0-250 psf	Squeezes between fingers
Soft	N=2-4	C=250-500 psf	Easily molded by finger pressure
Medium stiff	N=5-8	C=500-1000 psf	Molded by strong finger pressure
Stiff	N=9-15	C=1000-2000 psf	Dented by strong finger pressure
Very stiff	N=16-30	C=2000-4000 psf	Dented slightly by finger pressure
Hard	N>30	C>4000 psf	Dented slightly by pencil point

*N= Blows per foot in the Standard Penetration Test. In cohesive soils, with the 3 inch diameter sampler. 140-pound weight, divide the blow count by 1.2 to get N (Ref. 4).

MEASURES OF RELATIVE DENSITY OF GRANULAR SOILS (GRAVELS, SANDS, SILTS) (Ref's 2 & 3)

Very Loose	N=0-4**	RD=0-30	Easily push a ½ inch reinforcing rod by hand
Loose	N=5-10	RD=30-50	Push a ½ inch reinforcing rod by hand
Medium Dense	N=11-30	RD=50-70	Easily drive a ½ inch reinforcing rod
Dense	N=31-50	RD=70-90	Drive a ½ inch reinforcing rod 1 foot
Very Dense	N>50	RD=90-100	Drive a ½ inch reinforcing rod a few inches

**N= Blows per foot in the Standard Penetration Test. In granular soils, with the 3 inch diameter sampler, 140 pound weight, divide the blow count by 2 to get N (Ref 4). RD = Relative Density.

Ref. 1: ASTM Designation: D 2487-93, Standard Classification of Soils for Engineering Purposes(Unified Soil Classification system).
Ref.2: Terzaghi, Karl, and Peck, Ralph B., Soil Mechanics in Engineering Practice, John Wiley & Sons, New York, 2nd Ed., 967, pp. 30, 341, 347.
Ref.3: Sowers, George F., Introductory Soil Mechanics and Foundations: Geotechnical Engineering, Macmillan Publishing Company, New York, 4th Ed., 1979, pp. 80,81, and 312.
Ref.4: Lowe, John III, and Zaccheo, Phillip F., Subsurface Explorations and Sampling Chapter 1 in Foundation Engineering Handbook, Hsai-Yang Fang, Editor , Van Nostrand Reinhold Company, New, 2nd Ed, 1991, p.39/

APPENDIX A
TEST BORING LOGS AND TESTS

TEST LOG

TB1

File: 60423 Date Printed: 4/13/2020

PROJECT: RUSA - HOOKER ROAD GEO EXPLORATIO **PROJECT NO.:** 60423.22
CLIENT: PINNACLE ENGINEERING INC. **DATE:** 4/6/20
LOCATION: 43°15'09.21"N, 123°21'10.20"W **ELEVATION:** 576
DRILLER: TWS/TJB **LOGGED BY:** TJB
DRILLING METHOD: KUBOTA RTV 900X MICRO DRILL
DEPTH TO - WATER> INITIAL: 3 **AFTER DRILLING:** **SEEPAGE:**

DEPTH (feet)	Description	Recov (in)	Driven (in)	PID ppm	Sample#	Soil Type	Sampler	Symbol	TEST RESULTS
0	ML-SILT, medium brown, moist, loose (top soil) w/ roots and organics								Plastic Limit — Liquid Limit; Water Content - ●; 10 20 30 40 50
2	CRUSHED AGG. (ROAD BASE), VERY WET								
	CH-CLAY, light to medium brown, moist, medium stiff. Qc=16				35226		BAG		63
4					35227		BAG		
6	MH-clayey SILT w/ some sand, moist, medium stiff				35228		BAG		
8									
10	END TEST BORE AT 10 FEET. PRACTICAL REFUSAL. 50 BLOWS FOR 4".	3	10		35229		SPT		17-50-0 (N=50)
12									
14									

This information pertains only to this boring and should not be interpreted as being indicitive of the site.

LIQUID AND PLASTIC LIMITS TEST REPORT

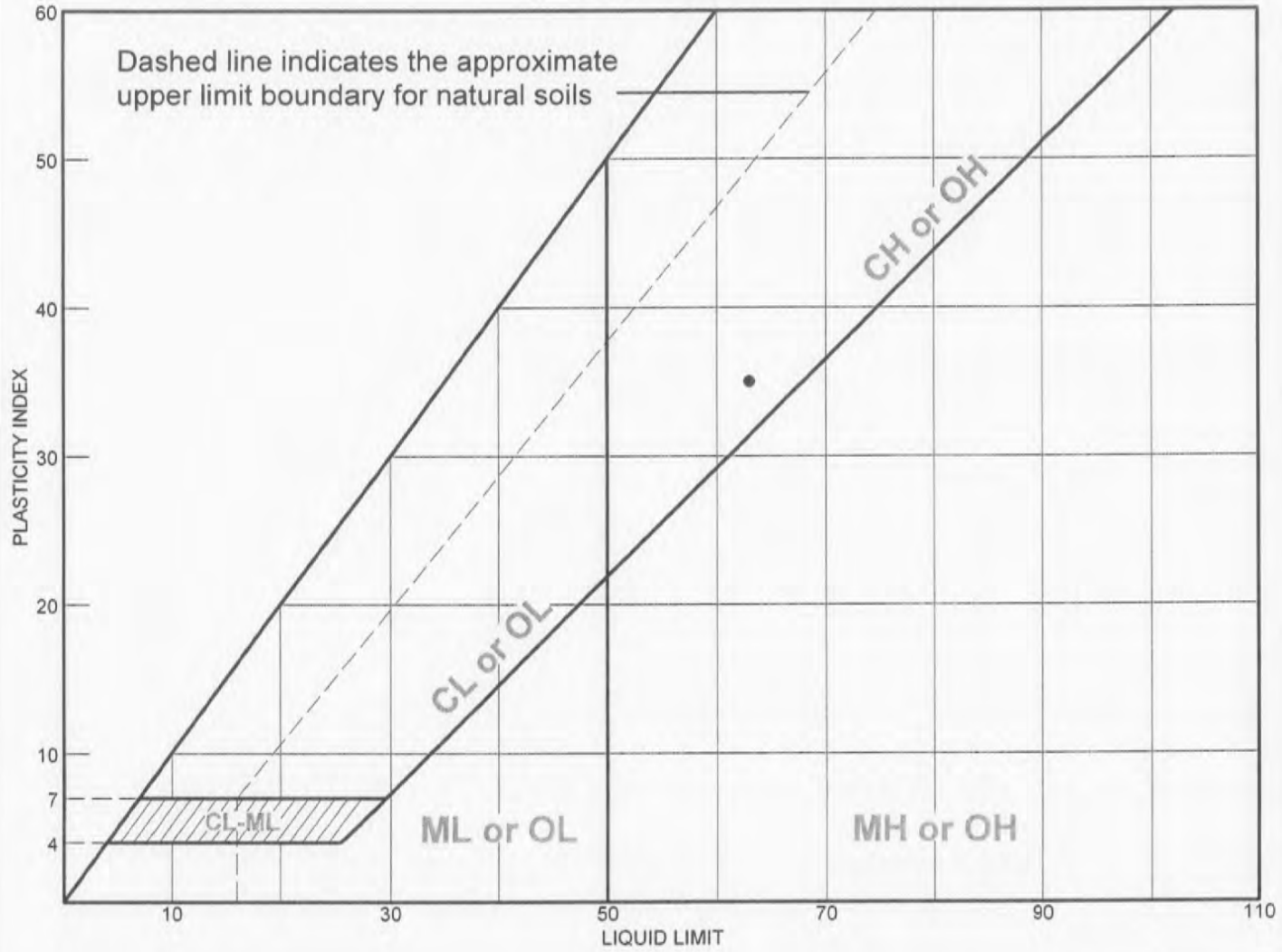

	MATERIAL DESCRIPTION	LL	PL	PI	%<#40	%<#200	USCS
●	CH-CLAY, light to medium brown, moist, medium stiff. Qc=16	63	28	35			CH

Project No. 60423.22 **Client:** PINNACLE ENGINEERING INC.

Project: RUSA - HOOKER ROAD GEO EXPLORATIO

● **Source:** TB1 **Sample No.:** 35226 **Elev./Depth:** 3

Remarks:

● TEST RAN BY TJB ON 4/13/20 PER ASTM D4318. pH=8.5

Western Testing, LLC

Roseburg, Oregon

Figure

TEST LOG

TB2

File: 60423 Date Printed: 4/13/2020

PROJECT: RUSA - HOOKER ROAD GEO EXPLORATIO
PROJECT NO.: 60423.22
CLIENT: PINNACLE ENGINEERING INC.
DATE: 4/6/20
LOCATION: 43°15'19.48"N, 123°21'10.61"W
ELEVATION: 563
DRILLER: TWS/TJB
LOGGED BY: TJB
DRILLING METHOD: KUBOTA RTV 900X MICRO DRILL
DEPTH TO - WATER> INITIAL: 4 AFTER DRILLING: SEEPAGE:

DEPTH (feet)	Description	Recov (in)	Driven (in)	PID ppm	Sample#	Soil Type	Sampler	Symbol
0	ML-SILT, medium brown, moist, loose (top soil) w/ roots and organics							
	CRUSHED AGGREGATE (COBBLE) 3-6"							
2								
4	CL-CLAY, medium brown, moist, medium stiff				35230		BAG	
6								
8	ML-clayey SILT,medium brown, damp, medium stiff				35231		BAG	
10	END TEST BORE AT 10 FEET. DESIRED DEPTH REACHED.							
12								
14								

TEST RESULTS

Plastic Limit ⊢——⊣ Liquid Limit
Water Content - ●
10 20 30 40 50

This information pertains only to this boring and should not be interpreted as being indicitive of the site.

LIQUID AND PLASTIC LIMITS TEST REPORT

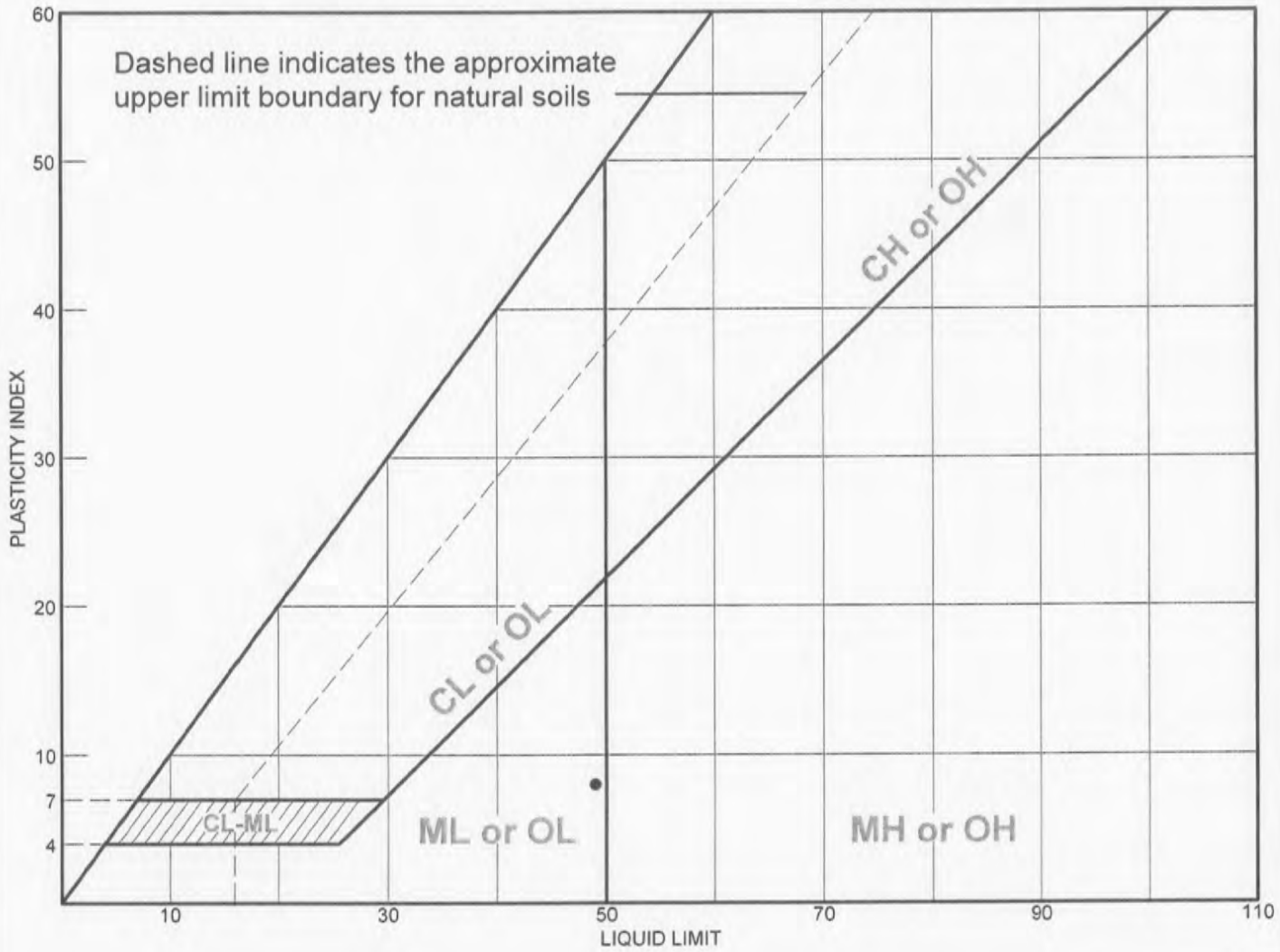

	MATERIAL DESCRIPTION	LL	PL	PI	%<#40	%<#200	USCS
●	ML-clayey SILT,medium brown, damp, medium stiff	49	41	8			ML

Project No. 60423.22 **Client:** PINNACLE ENGINEERING INC.

Project: RUSA - HOOKER ROAD GEO EXPLORATIO

● **Source:** TB2 **Sample No.:** 35231 **Elev./Depth:** 8

Remarks:

● TEST RAN BY TJB ON 4/13/20 PER ASTM D4318. pH=8.4

Western Testing, LLC

Roseburg, Oregon

Figure

TEST LOG

TB3

File: 60423 Date Printed: 4/13/2020

PROJECT: RUSA - HOOKER ROAD GEO EXPLORATIO **PROJECT NO.:** 60423.22
CLIENT: PINNACLE ENGINEERING INC. **DATE:** 4/6/20
LOCATION: 43°15'23.55"N, 123°21'10.16"W **ELEVATION:** 591
DRILLER: TWS/TJB **LOGGED BY:** TJB
DRILLING METHOD: KUBOTA RTV 900X MICRO DRILL
DEPTH TO - WATER> INITIAL: ____ **AFTER DRILLING:** ____ **SEEPAGE:** ____

DEPTH (feet)	Description	Recov (in)	Driven (in)	PID ppm	Sample#	Soil Type	Sampler	Symbol	TEST RESULTS
0	CRUSHED AGGREGATE (ROAD BASE)								Plastic Limit ⊢——⊣ Liquid Limit Water Content - ● 10 20 30 40 50
2	ML- SILT w/some rounded aggregate, medium brown, damp, very stiff				35232		BAG		
4	ML- SILT w/some shale, medium brown, damp, medium stiff Qc=36	8	18		35233 35234		SPT BAG		5-5-12 (N=17)
	END OF TEST BORE AT 5 FEET, DRILL REFUSAL.				35235		BAG		
6									
8									
10									
12									
14									

This information pertains only to this boring and should not be interpreted as being indicitive of the site.

LIQUID AND PLASTIC LIMITS TEST REPORT

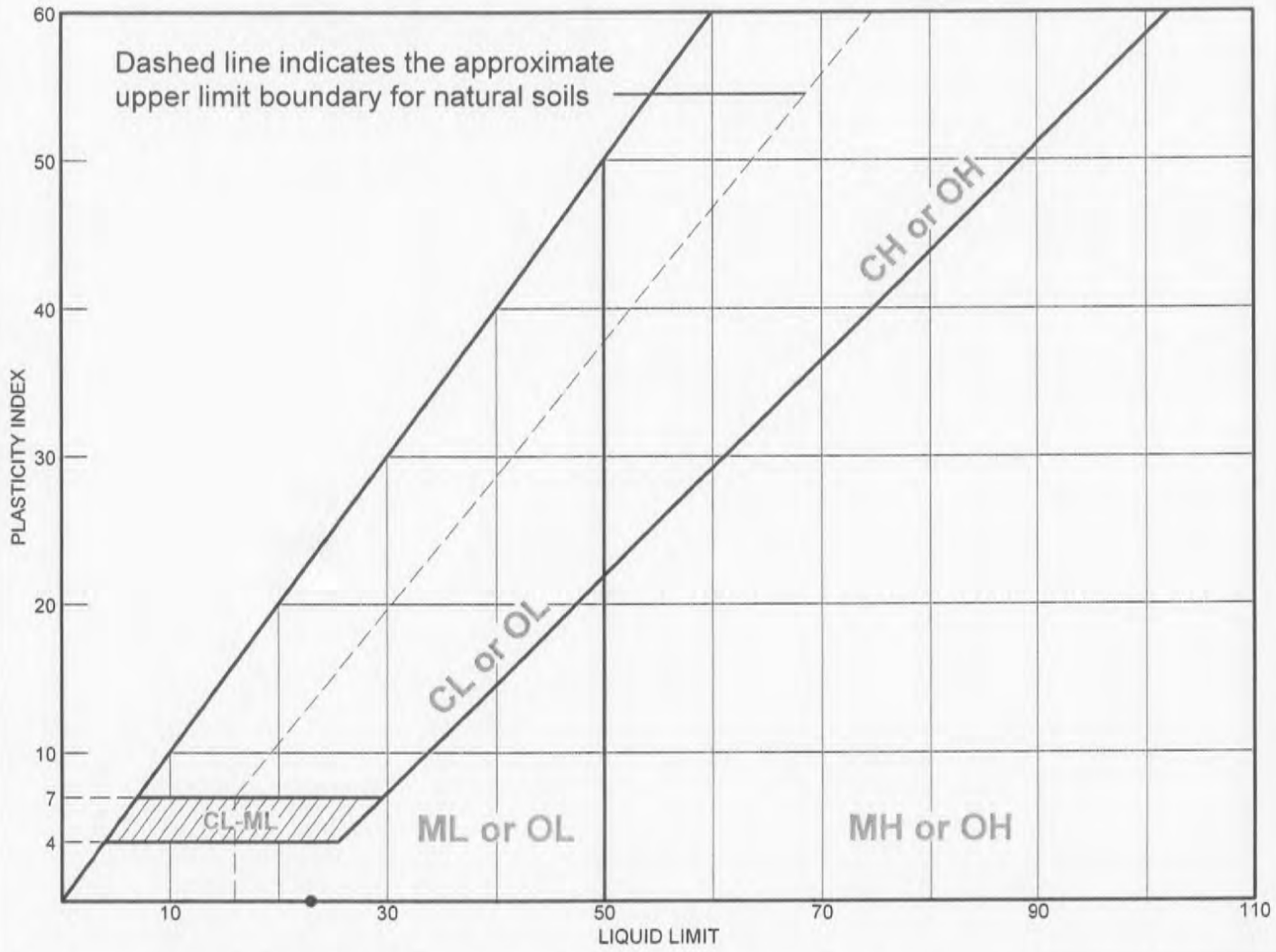

	MATERIAL DESCRIPTION	LL	PL	PI	%<#40	%<#200	USCS
●	ML- SILT w/some shale, medium brown, damp, medium stiff Qc=36	23	23	NP			ML

Project No. 60423.22 **Client:** PINNACLE ENGINEERING INC.

Project: RUSA - HOOKER ROAD GEO EXPLORATIO

● **Source:** TB3 **Sample No.:** 35235 **Elev./Depth:** 5

Remarks:

● TEST RAN BY TJB ON 4/13/20 PER ASTM D4318. pH=8.5

Western Testing, LLC

Roseburg, Oregon

Figure

TEST LOG

TB4

File: 60423 Date Printed: 4/13/2020

PROJECT: RUSA - HOOKER ROAD GEO EXPLORATIO **PROJECT NO.:** 60423.22
CLIENT: PINNACLE ENGINEERING INC. **DATE:** 4/6/20
LOCATION: 43°15'28.06"N, 123°21'10.96"W **ELEVATION:** 578
DRILLER: TWS/TJB **LOGGED BY:** TJB
DRILLING METHOD: KUBOTA RTV 900X MICRO DRILL
DEPTH TO - WATER> INITIAL: _____ **AFTER DRILLING:** _____ **SEEPAGE:** _____

DEPTH (feet)	Description	Recov (in)	Driven (in)	PID ppm	Sample#	Soil Type	Sampler	Symbol
0	CRUSHED AGG. (ROAD BASE)							
2	CH- silty CLAY, medium brown, moist, medium stiff				35236		BAG	
4	CH- silty CLAY, light brown, moist, medium stiff				35237		BAG	
6	CH- silty CLAY w/some small aggregate, light brown, moist, medium stiff				35238		BAG	
8	END TEST BORE AT 8 FEET. DESIRED DEPTH REACHED							
10								
12								
14								

TEST RESULTS

Plastic Limit ⊢——⊣ Liquid Limit
Water Content - ●
10 20 30 40 50

This information pertains only to this boring and should not be interpreted as being indicitive of the site.

LIQUID AND PLASTIC LIMITS TEST REPORT

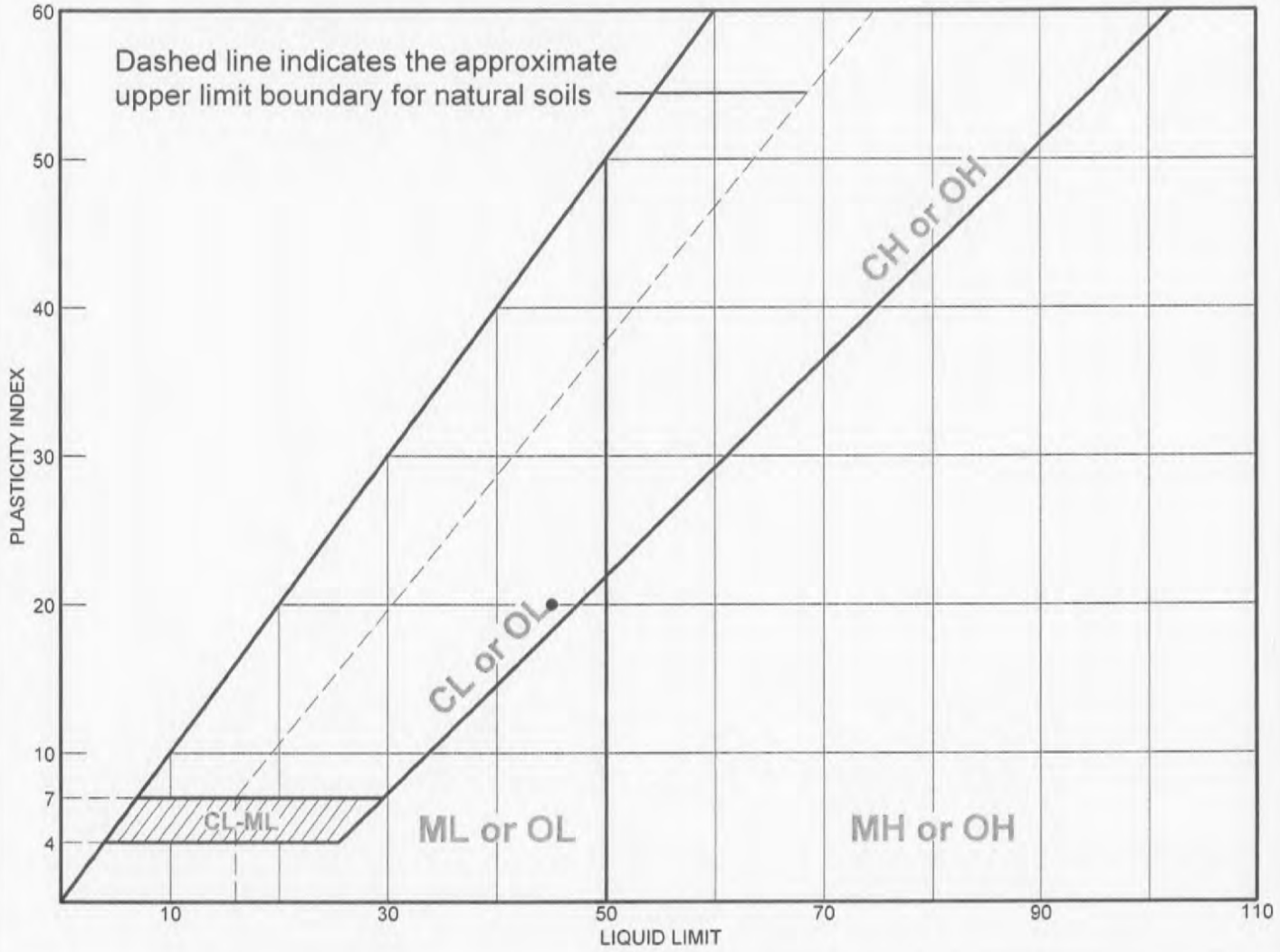

	MATERIAL DESCRIPTION	LL	PL	PI	%<#40	%<#200	USCS
●	CH- silty CLAY w/some small aggregate, light brown, moist, medium stiff	45	25	20			CL

Project No. 60423.22 **Client:** PINNACLE ENGINEERING INC.

Project: RUSA - HOOKER ROAD GEO EXPLORATIO

● **Source:** TB4 **Sample No.:** 35238 **Elev./Depth:** 6

Remarks:

● TEST RAN BY TJB ON 4/13/20 PAR ASTM D4318. pH=8.1

Western Testing, LLC

Roseburg, Oregon

Figure

MARSH

Railroad Protective Liability Application

Named Insured Railroad: _____

Address: _____

Name of Designated Contractor: _____

Address: _____

Contractors GL Limits: _____

Carrier: _____

Contractors Umbrella Limits: _____

Carrier: _____

Will the Contractor be holding the Railroad Harmless? Yes ☐ No ☐

Will the Railroad be listed as an "Additional Insured" on the Contractor's CGL and Umbrella policies? Yes ☐ No ☐

Will the Contractor's GL & Umbrella policies remove the contractual exclusion for work within 50' of a Railroad? Yes ☐ No ☐

Railroad Protective Limits Required: _____

Per Occurrence: _____ Aggregate: _____

Name & Address for Whom Work is Being Performed: _____

Description of Job: _____

Approximate Length of Job (years/months): _____

Total Cost of Job: _____ Cost of Work Within 50' of Tracks: _____

Daily Train Traffic: _____ Freight: _____ Passenger: _____

Will there be any Railroad flagmen/supervisors? Yes ☐ No ☐

Will there be any other work performed by any railroad employees? Yes ☐ No ☐

If yes, please describe: _____

Will there be any Railroad equipment assigned to the contractor? Yes ☐ No ☐

If yes, please describe: _____

Signature: _____ Date: _____

Printed Name: _____

Title: _____

Official Use Only

PERMIT #_____

AUTHORIZATION # _____

DOUGLAS COUNTY PUBLIC WORKS DEPARTMENT
APPLICATION FOR RIGHT OF WAY ACTIVITY PERMIT
SEE PAGE 2 FOR INSTRUCTIONS

APPLICANT INFORMATION

Name:_____

Mailing Address:_____

Phone Number: _____ Email Address:_____

PROJECT/ACTIVITY INFORMATION

Project Situs Address:_____

County Road Name:_____ Milepost(s):_____

Property ID#: _____ Tax Lot #:_____

Location Description:_____

Project/Activity Description:_____

_____

_____

_____

Work to be performed by: ☐ Applicant ☐ Contractor ☐ Other _____

PERMIT REQUIREMENTS *Check applicable box below and attach required materials*

☐ Access Permit: *Select appropriate box below and submit a Location Map*

☐ New Access (must mark location with paint or flagging) ☐ Modifying Existing Access ☐ Inspection of Existing Access

☐ Utility Permit: *Submit the following items*

• Location Map • Project Drawings • Traffic Control Plan

☐ Site Development/ Road Construction Permit: *Submit the following items*

• Location Map • Project Drawings • Traffic Control Plan • Drainage Report & Traffic Impact Study (if applicable)

☐ Tree Removal Permit: *Submit the following items*

• Location Map

☐ Other Work Permit (includes drainage, landscaping, commercial filming, and other work not covered above)

Please describe work in detail, submit a Location Map, and attach any supporting materials _____

_____

_____

_____

Applicant Signature:_____ **Date**:_____

Submit application with attachments by mail or hand deliver to:

Douglas County Public Works Department
1036 SE Douglas Ave, Courthouse Room 304
Roseburg, OR 97470

APPLICATION INSTRUCTIONS

Applicant Information: Provide all requested information to ensure prompt processing of the application. The mailing address listed will be used to send an approved or denied permit, and the phone number and email will be used to contact the applicant with any questions during the review process.

Project Situs Address: Provide street address for the physical location of the proposed work site. If no address is available, put "N/A".

County Road Name: Provide the road name where the proposed work will be performed within County right of way.

Milepost: Provide the approximate mile post location of the proposed work site. These can be found clicking on the "Base GIS Map" link on the following County website: http://www.co.douglas.or.us/GISweb/default.asp and selecting the Transportation map

Property ID #: Provide the property ID # of the parcel where the proposed work is taking place. This ID # is in the form "R11111" and can be found at the County Assessor's website: http://www.co.douglas.or.us/puboaa/puboaa_search.asp

Tax Lot #: Provide the Map Tax Lot# of the parcel where the proposed work is taking place. This Lot # is in the form "22-09W-18DB-01000" and can be found at the aforementioned County Assessor's website

Location Description: Provide any additional location information such as nearest town, cross roads, local directions, landmarks, etc to help identify the physical location of the proposed work site.

Project/Activity Description: Provide general description of the proposed work to be done. Examples include "Installing new power pole"; "Widen existing driveway"; "Cutting trees along right of way"; "Bore road and trench new service"; "Install new sidewalk"

Work to be performed by: Indicate who will be doing proposed work.

Permit Requirements: There 5 different types of Right of Way Activity Permits. Select only one box per application.

Access Permit: Select the appropriate type of access permit. Examples include a new driveway for new home, development, shop, or RV parking, widening existing driveway, or paving an existing driveway. For a new access, the location must be marked by flagging and/or paint so as to be visible from the road, and a location map must be provided with the application. If an existing access is not easily identifiable from the road, please mark with flagging and/or paint.

Utility Permit: Each different location requires a separate application and permit. Provide a detailed location map with the application. Attach the applicable Plan Sheet from the Project Drawings to the application. Attached Traffic control plans for work operations lasting three days or less shall conform to the latest version of the "Oregon Temporary Traffic Control Handbook for Operations of 3 Days or Less". All other traffic control plans shall conform to the latest version of the "Manual of Uniform Traffic Control Devices" (MUTCD).

Site Development/Road Construction Permit: Select this Permit for any projects involving new roadway or road frontage construction, existing roadway or road frontage improvements, or connecting to County storm drainage facilities. Examples include a subdivision involving new or existing public roads, road frontage improvements for retail, commercial, or residential property development, adding a turn lane to existing road, widening or extending existing road, paving of existing road, installing new sidewalks, or modifying existing sidewalks.

Tree Removal Permit: Provide a detailed location map with the application.

Other Work Permit: Select this Permit for any work in County right-of-way not covered by above. This includes any drainage work, landscaping, sign installation, mailbox supports, fence replacement, commercial or movie filming etc. Provide a detailed description of the work and Location map, as well as any other helpful materials.

Application Signature: Wet signature required. Unsigned applications cannot be processed properly.

City of Roseburg Public Works Department

PERMIT TO DO CONSTRUCTION OR UTILITY WORK
WITHIN PUBLIC RIGHT-OF-WAY

No. _____

S.R. No. _____

Application having been made by _____
(Applicant's Name and/or Organization)

_____
(Applicant's Address) (Applicant's Phone Number)

to construct or install utilities or do other work within the public right-of-way at _____
(Nearest Street Address)

_____ in Roseburg, Oregon for _____
(Description of Work)

Approximate size of cut: Length _____, Width _____, Depth _____

Fee For Excavation Over 40 L.F. @ $0.35 per L.F. = $ _____

Fee For Boring and Overhead @ $0.10 per L.F. = $ _____

B-9 010-0000-321-1010 Plus Fee Set by Resolution = $ 30.00

Fee Paid: _____ _____ _____ **TOTAL = $** _____
(Date) (Received By) (Receipt No.)

GENERAL CONDITIONS:

1) At least 48 hours before beginning work, the applicant or his contractor shall notify the Public Works Department at (541) 440-1182.
2) Unless specifically approved in space provided below, no excavation, spoil pile, machinery material, barricades, etc. or combination thereof may occupy more than one-half the traveled width of the street. Special conditions must be strictly complied with. Any work closing one or more travel lanes requires a Street Closure Permit from Public Works.
3) All work within the City rights-of-way must be performed in accordance with the City standard specifications and as directed by the Public Works Director or his representative. These specifications are available upon request. This office must be notified **at least 4 hours before** any backfill is placed (541-440-1182). No backfill shall be placed without the consent and inspection by an appointed representative of the Public Works Director's office.
4) The permittee or his contractor shall provide traffic control in accordance with Part VI of the Manual On Uniform Traffic Control Devices (M.U.T.C.D) and the O.D.O.T Short Term Traffic Control Handbook.
5) Permittee is responsible for backfill and compaction there of and protection of the trench with "cold mix" asphalt **immediately (same day) after completing repairs,** hookup, etc. A permanent patch shall be made within sixty days.
6) The Permittee shall assume full liability in cases involving this excavation.
7) The Permittee or his contractor shall be responsible for locating and protecting all existing utilities (One-Call 1-800-332-2344).
8) Work between the hours of 7 p.m. and 6 a.m. requires special authorization from the Public Works Director.
9) The Permittee is responsible for maintaining that portion of the right-of-way affected by the permitted work for a period of one year from the date of Final Inspection. Should any evidence of subsidence or other forms of failure appear in the one year period, this shall be sufficient cause to reconstruct the backfill and street patch.
10) Oregon law requires you to follow rules adopted by the Oregon Utility Notification Center. Those rules are set forth in OAR 952-001-0010 through OAR 952-001-0090. You may obtain copies of the rules by calling the center.
11) If any hazardous material is encountered, permittee shall be responsible for notifying the proper authorities and the City of Roseburg. Permittee shall be responsible for any costs associated with testing, cleanup, and monitoring of the contaminated site.
12) If any of the work involved is defective and/or the required patching is not installed a **reinspection fee of $50.00** may be charged to the permittee for each reinspection. RMC 4.02.180D

SPECIAL CONDITIONS: _____

_____

The undersigned has read both General Conditions and agrees to comply with all conditions stated above.

Date: _____ Permittee Signature _____

Permission is hereby granted for construction in accordance with the above application.

Public Works Department _____

NOTICE:

1. This permit is for Public Right-Of-Way area only and does not include any work on private property.
2. **For inspection call 440-1182 at least 4 hours prior to backfilling. Request must include permit number.**
3. This permit void after 1 year unless renewed.

SAMPLE